BONENG

H斜齿齿轮箱&B锥齿-斜齿齿轮箱

H Helical Gearbox & B Bevel-helical Gearbox

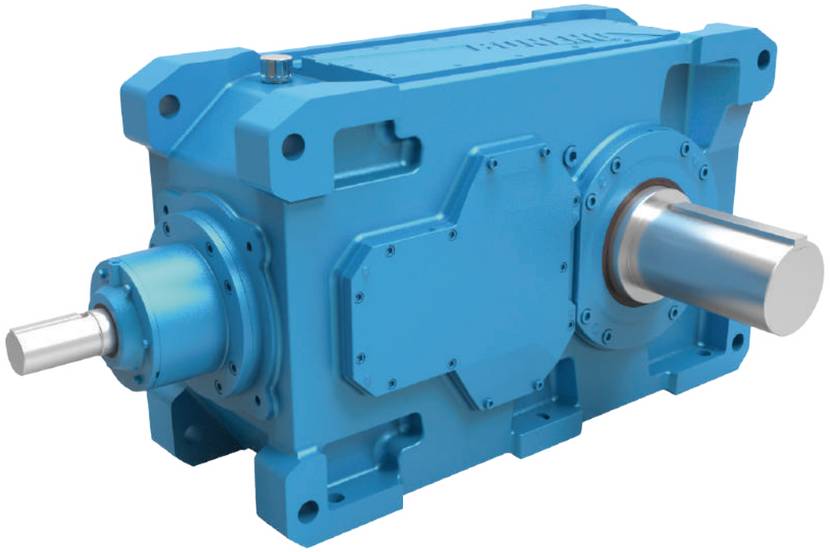

H斜齿齿轮箱&B锥齿-斜齿齿轮箱

H Helical Gearbox & B Bevel-helical Gearbox

Edit date 08/2026
Selection Catalogue: C05.0029

BONENG

Boneng Transmission

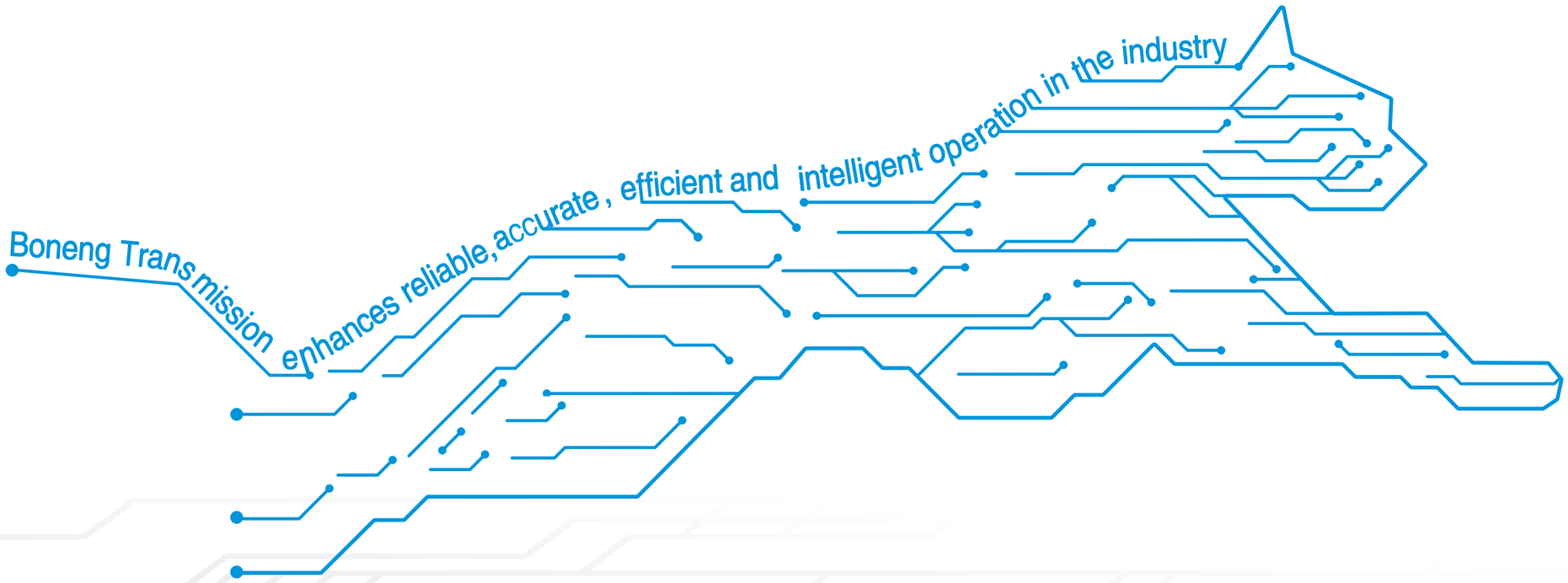

控制器/驱动器/马达/
齿轮马达/齿轮箱

Controller/ Drive/ Motor/
Gearmotor/ Gearbox

BONENG

H斜齿齿轮箱&B锥齿-斜齿齿轮箱

H Helical Gearbox &B Bevel-helical Gearbox

博能公司在总结二十余年齿轮箱设计制造经验，分析和吸收国际上重载齿轮箱设计制造先进技术的基础上，创新发展，推出新型H&B重载齿轮箱，以更好满足客户要求。
同国际上先进的重载齿轮箱和博能公司原有H&B工业齿轮箱相比，博能公司新型H&B重载齿轮箱具有：

- 独创的模块化设计，零部件通用最大化，便于国际化生产，库存少，供货周期短。
- 独创的模块化设计，功能附件的配置互换程度高，能灵活满足客户设备要求的各种结构及布置形式和不同的使用工况。
- 传动轴系折线布置，齿轮箱在相同体积下，传动中心距加大，承载能力更强。
- 齿轮副啮合重合度增大，传动更平稳，噪声更低。
- 通过拟生态的外观设计，赋予产品运动和力量的天性内涵，体现了博能公司世界级的卓越产品设计理念，并拥有自主知识产权。
- 箱体框架式的受力结构设计，整体更强劲，底脚更牢固。
- 改进了冷却风扇和冷却盘管的设计，能更有效降低齿轮箱运行时温度。
- 输出部分轴封采用双油封密封，密封更可靠，适用工况更广泛。

On the basis of summarizing gearbox design and manufacturing experiences in the past twenty years, analyzing and absorbing advanced technology of international heavy duty gearbox production, Boneng transmission makes innovative development, pushing forward the new type H&B heavy duty gearbox to better satisfy customer requirements.
Compared with internationally advanced gearbox and the original H&B industrial gearbox of Boneng, the new type H&B heavy duty gearbox have the following characteristics:

- Unique modular design, general applications of components are maximized, which is convenient for international production. Storage quantity is small, supplement circle is short.
- Unique modular design, allocation exchange degree of functional attachments flexibly satisfy various kinds of required structures, arrangement form and different working situations of customer equipment.
- Transmission shaft is in line layout, under the same volume, transmission central distance is larger, bearing capacity is larger.
- Wheel pair meshing contact ratio increases, transmission is more stable, noise is lower.
- The appearance design shows world-wide product design idea of Boneng Transmission, it owns intellectual property rights.
- Frame type load-carrying structure design, the whole structure is stronger, footing is more fastened.
- Improved cooling fan and cooling coil design can effectively reduce the temperature during gearbox running.
- Output shaft sealing applies double oil sealing, the sealing is more reliable, the applications are wider.

BONENG

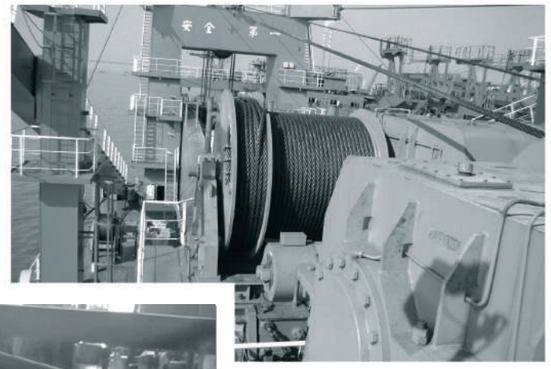

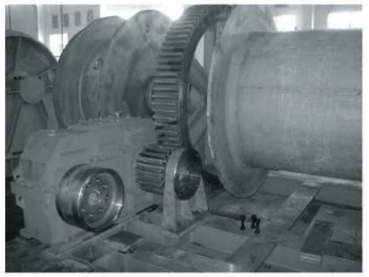

在煤炭、电力、石油、冶金、水泥、港口、起重运输行业，博能公司高品质、长寿命的新型齿轮箱都能满足您的要求。

In all industry, all technology team and sales of BONENG will offer best technical solution and best service to you.

注意事项：

- ◆ 样本中的结构示意图、外形图及其他附图只属范例，无严格比例要求。（未注尺寸单位均为mm）。
- ◆ 所注重量仅为平均值，并不具有约束力。

Note：

- ◆ The structure scheme,appearance diagram and other attached diagrams in sample are examples,there is no strict proportion requirement.(The unmarked dimension units are mm).
- ◆ We can only refer to the marked weight in the manual.

⚠ 必须严格遵守以下各项：

- ◆ 为防止意外事故发生，所有旋转部件均按照使用者所在国家和地区的安全规范由购置方加罩保护。
- ◆ 试车之前必须认真阅读使用说明书。
- ◆ 齿轮箱在供货时已处于准运行状态，运行前需加注润滑油。
- ◆ 本样本中注油量只作为参考值，实际注油量应以油尺上的标记为准。
- ◆ 润滑油粘度应按齿轮箱使用工况及使用环境温度选取。
- ◆ 推荐采用知名品牌的润滑油。

⚠ You must conform to the following instructions

- ◆ To prevent accidents, all the rotation parts should be added with protective covers according to local safety regulations and laws.
- ◆ Before testing, users should read instruction manual carefully.
- ◆ Gearbox has been tested before delivered, users should add lubrication oil before running.
- ◆ We can only refer to the marked oil in the manual. Actual oil filling level should be the same with the mark on oil immersion lens.
- ◆ Lubrication oil viscosity should be selected according to working conditions and the temperature of local environment.
- ◆ Users can only use high quality lubrication oil.

产品功能标识

油 镜

通气帽

进油孔

放油孔

Product Function Mark

Oil glass

Breather

Oil filler

Oil drain

目 录 Contents

01.结构示意图 …… 003
02.安装形式 …… 004
03.选型 …… 005
04.服务系数 …… 009
05.常用代号说明 …… 013
06.选型举例 …… 014
07.传动能力表 …… 015
08.额定热容量表 …… 051
09.输出轴允许的附加径向力 …… 087
10.布置形式 …… 089
11.外形尺寸 …… 094
12.轴端中心孔 …… 123
13.平键与键槽尺寸 …… 124
14.建议输出联结尺寸图表 …… 125
15.法兰输入和电机输入 …… 131
16.附件 …… 139

01.Structure scheme …… 003
02.Mounting mode …… 004
03.Selection …… 007
04.Service factors …… 009
05.Key to symbols …… 013
06.Selection example …… 014
07.Transmission capacity table …… 015
08.Rated thermal capacity table …… 051
09.Permissible additional radial force on output shaft …… 087
10.Shaft assemblies …… 089
11.Outline dimension …… 094
12.Shaft end centre hole …… 123
13.Dimension of parallel key and keyway …… 124
14.Suggested output connection dimensions …… 125
15.Input with motor and flange input …… 131
16.Accessory …… 139

1 结构示意图　　1 Structure scheme

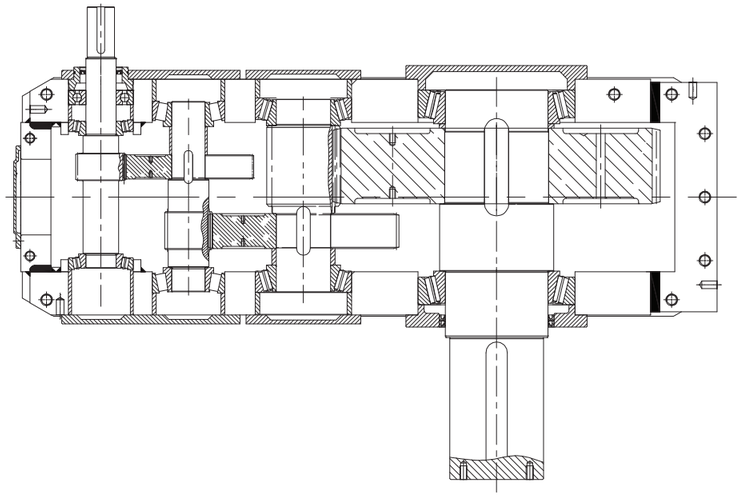

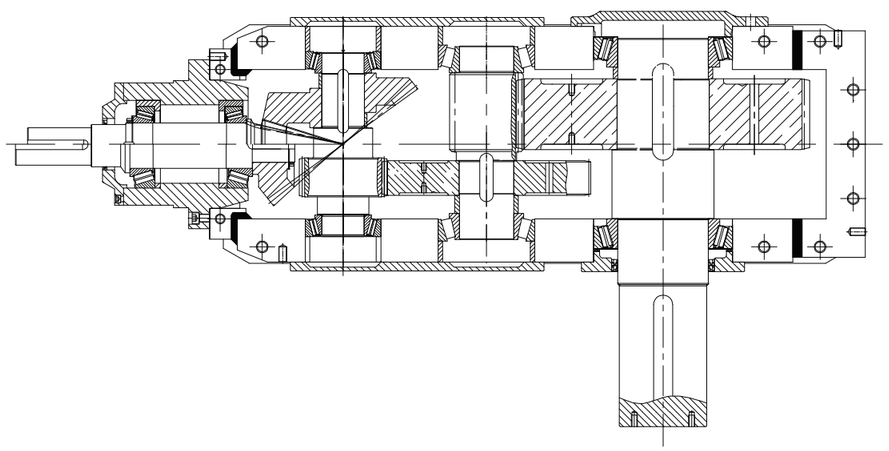

2 安装形式　　2 Mounting positions

卧式安装			Horizontal mounting	
	Solid shaft	Hollow shaft	Hollow shaft with shrink disk	Hollow shaft with involute spline
H series 5.6-450	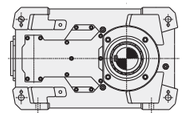 H…HS	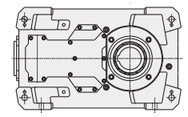 H…HH	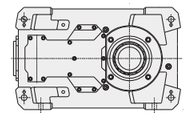 H…HD	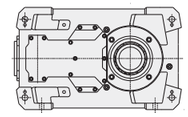 H…HK
B series 6.3-400	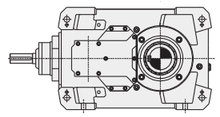 B…HS	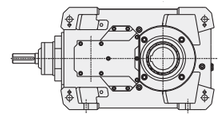 B…HH	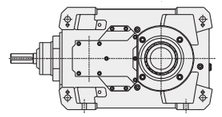 B…HD	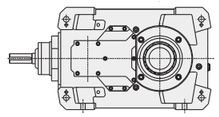 B…HK

立式安装			Vertical mounting	
	Solid shaft	Hollow shaft	Hollow shaft with shrink disk	Hollow shaft with involute spline
H series iN= 5.6 - 450	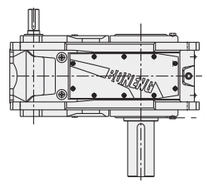 H…VS	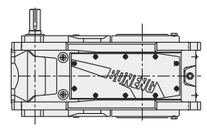 H…VH	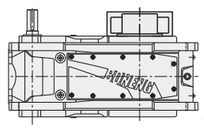 H…VD	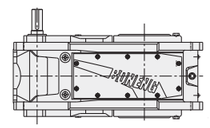 H…VK
B series iN= 6.3 - 400	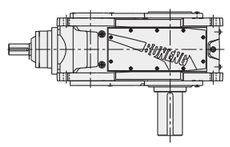 B…VS	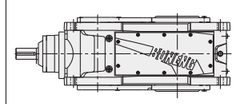 B…VH	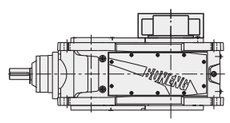 B…VD	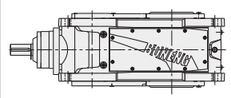 B…VK

3 选型

序号	说明	代号	参数计算
1	被驱动设备系数	f_1	见05页f1表
2	原动机系数	f_2	原动机 f_2 电机、液压马达、汽轮机 1.0 4-6缸活塞发动机，周期变化1：100至1：200 1.25 1-3缸活塞发动机，周期变化1：100 1.5
3	齿轮箱可靠度系数	S_F	见04页S_F表
4	输入与输出轴关系	H、B	平行选H系列，垂直选B系列
5	齿轮箱传动效率	η	二级:96%，三级:94%，四级:92%
6	输入转速	n_1	≤1800r/min 更高转速敬请垂询
7	确定减速比	i	$i=n_1/n_2$
8	以被驱动设备所需的扭矩或功率，确认齿轮箱输入功率	P_1	$P_1=T_2 \cdot n_1/(9550 \cdot i \cdot \eta)$ 或 $P_1=P_2/\eta$
9	根据计算，查传动能力表，确认齿轮箱输入功率	T_{2N}、P_{1N}	$T_{2N} \geqslant T_2 \cdot f_1 \cdot f_2 \cdot S_F$ 或 $P_{1N} \geqslant P_1 \cdot f_1 \cdot f_2 \cdot S_F$ 如果不满足条件：$3.33 \cdot P_1 \geqslant P_{1n}$，敬请垂询。
10	峰值扭矩校核*	T_A	$P_{1N} \geqslant T_A \cdot n_1 \cdot f_3/9550$
11	选定连接安装和附件后、校核轴许用强度	F_{r1}/F_{r2} F_{a1}/F_{a2}	当输入、输出轴为皮带轮、链轮或齿轮等明显有附加径向力传动时，必须校核径向力（见23页）
12	确认润滑方式、选择润滑油		卧式安装：可供选择的润滑方式： 1）飞溅润滑 2）浸油润滑 3）强制润滑 轴端泵润滑 电机油泵润滑 用户必备稀油站润滑 立式安装：可供选择的润滑方式： 1）浸油润滑 2）强制润滑 轴端泵润滑 电机油泵润滑 用户必备稀油站润滑
13	确认冷却方式		1)如满足以下条件，则齿轮箱不带辅助冷却装置。 $P_1 \leqslant P_{GA} \times f_4 \times f_8$ 2)如满足以下条件，则齿轮箱带冷却风扇可满足要求。 $P_1 \leqslant P_{GB} \times f_4 \times f_8$ 3)如满足以下条件，则齿轮箱带水油式冷却器可满足要求。 $P_1 \leqslant P_{GD} \times f_5 \times f_8$ 4)另外齿轮箱可配置其他冷却附件：风冷却器及用户可以自己配置稀油站提供循环冷却油（f_4、f_5、f_8见04页）。
14	按型号表示方法确定各项		型号表示方法见02页

f_3	每小时峰值负荷次数 1-5	6-30	31-100	>100
单向载荷	0.5	0.65	0.7	0.85
交变载荷	0.7	0.95	1.10	1.25

*峰值扭矩：最大负载扭矩，是指启动、制动或最大脉动载荷所引起的最大扭矩。（一般工况条件下峰值扭矩为启动或制动时的最大扭矩）

齿轮箱可靠度系数	S_F
一般设备，齿轮箱失效后仅仅引起单机停产，并且更换零部件比较容易，损失较小。	$1.0 \leqslant S_F \leqslant 1.3$
重要设备，齿轮箱失效后使生产线或者全场停工，停机事故损失比较大。	$1.3 < S_F \leqslant 1.5$
高可靠度要求，齿轮箱失效后可能造成重大停产事故，造成极大的经济损失，以及人身生命事故。	$1.5 < S_F$

环境温度系数 f_4

不带辅助冷却装置或仅带冷却风扇

环境温度	每小时工作周期（ED）百分比% 100	80	60	40	20
10℃	1.11	1.31	1.60	2.14	3.64
20℃	1.00	1.18	1.44	1.93	3.28
30℃	0.88	1.04	1.27	1.70	2.89
40℃	0.75	0.89	1.08	1.45	2.46
50℃	0.63	0.74	0.91	1.22	2.07

环境温度系数 f_5

带水油冷却器

环境温度	每小时工作周期（ED）百分比% 100	80	60	40	20
10℃	1.05	1.23	1.50	2.03	3.41
20℃	1.00	1.17	1.43	1.93	3.25
30℃	0.93	1.09	1.33	1.79	3.02
40℃	0.87	1.02	1.24	1.68	2.83
50℃	0.81	0.95	1.16	1.56	2.63

⚠注：工作周期ED：$ED=\frac{tf}{tf+tr} \cdot 100\%$

tf：带负载的工作时间；　tr：停歇时间。

立式安装齿轮箱供油系数。对于卧式安装齿轮箱f8=1.0；当采用强制润滑时，f8=1.05. f8

齿轮箱类型	供油方式	不带辅助冷却装置	带冷却风扇	带冷却盘管	带风扇和冷却盘管
H2..V,H3..V H4..V	浸油润滑	0.95	*	0.95	*
	强制润滑	1.15	*	1.05	*
B2..V,B3..V B4..V	浸油润滑	0.95	0.95	0.95	0.95
	强制润滑	1.15	1.10	1.10	1.10

* 敬请垂询。

型号表示方法

B 3 12 H S A - C56 - F280 + U F 21

系列名
H斜齿齿轮箱
B螺旋锥齿轮-斜齿齿轮箱

传动级数
2级/3级/4级

机座号

安装形式
H=卧式安装
V=立式安装

输出轴方式
S=平键实心轴
H=平键空心轴
D=带锁紧盘空心轴
K=花键空心轴

布置形式
A/B/C/D/E/F/G/H/I

公称减速比代号

输入轴方式
M,MH,MP,YZ=电机
F=电机连接法兰
S=S轴输入

附件和指定配置

3 Selection

Serial	Definition	Symbol	Parameter calculation
1	Driven equipment factor	f_1	Refer to page5 f1 table
2	Prime mover factor	f_2	Prime mover factor: f_2 Motor, hydraulic motor, turbine: 1.0 4-6 Cylinder piston engine, cyclic variation 1:100 to 1: 200: 1.25 1-3 Cylinder piston engine, cyclic variation 1:100: 1.5
3	Gearbox safety factor	S_F	Refer to page4 sf table
4	Relation between input and output shafts	H、B	Parallel shaft select H series, right angle, select B series
5	Transmission efficiency of gearbox	η	2-stage:96%,3-stage:94%,4-stage:92%
6	Input speed	n_1	≤1800r/min For higher speed, please consult us.
7	Determination of ratio	i	$i=n_1/n_2$
8	Confirm gearbox input power with torque or power needed by driven equipment.	P_1	$P_1=T_2 \cdot n_1/(9550 \cdot i \cdot \eta)$ or $P_1=P_2/\eta$
9	According to calculation, check transmission capacity table to determine gearbox size	T_{2N}、P_{1N}	$T_{2N} \geq T_2 \cdot f_1 \cdot f_2 \cdot S_F$ OR $P_{1N} \geq P_1 \cdot f_1 \cdot f_2 \cdot S_F$ If it doesn't satisfy conditions:$3.33 \cdot P_1 \geq P_{1N}$, Please consult us.
10	Peak torque verification*	T_A	$P_{1N} \geq T_A \cdot n_1 \cdot f_3/9550$ f_3 — Load peaks per hour: 1-5 / 6-30 / 31-100 / >100 Single direction loading: 0.5 / 0.65 / 0.7 / 0.85 Alternate loading: 0.7 / 0.95 / 1.10 / 1.25
11	After selecting connection mounting and accessories, check allowable strength of the shaft	F_{r1}/F_{r2} F_{a1}/F_{a2}	Radial load need to be checked when radial load imposed by belt pulley,chain sprocket and gear are present. (See page 23)
12	Determine lubrication method, select lubrication oil		Horizontal mounting: Lubrication methods for selection： 1) Splash lubrication 2) Dip-in lubrication 3) Forced lubrication Shart end pump lubrication Motor oil pump lubrication Oil station lubrication Vertical mounting: Lubrication methods for selection： 1) Dip-in lubrication 2) Forced lubrication Shart end pump lubrication Motor oil pump lubrication Oil station lubrication
13	Determine cooling method		1) If it satisfies the following condition, the gearbox will not be equipped with auxiliary cooling device. $P_1 \leq P_{GA} \times f_4 \times f_8$ 2) If it satisfies the following condition, the gearbox will not be equipped with cooling fan. $P_1 \leq P_{GB} \times f_4 \times f_8$ 3) If it satisfies the following condition, the gearbox will not be equipped with water-oil cooler. $P_1 \leq P_{GD} \times f_5 \times f_8$ 4) Gearbox can be equipped with other cooling devides:air-oil cooler, water-oil cooler,users can equip petrol station by themselves to provide circulated cooling oil. (Refer to page 4 for f_4、f_5、f_8)
14	Determine each item according to type designation		Refer to page2

*Peak torque:maximum loading torque means the maximum torque caused by starting,braking or maximum pulse loading. (Under common working conditions,peak torque is the maximum torque may occur when a machine starts or brakes)

Gearbox safety factor	S_F
For ordinary equipment, only single machine stops production when gearbox fails.easy to replace spare parts and minor loss occured.	$1.0 \leq S_F \leq 1.3$
For inportant equipment, the production line or the whole plant will stop production, when gearbox fails, great loss occured, stopping accident loss is large.	$1.3 < S_F \leq 1.5$
High reliability requirement,it may cause heavy production stop accident, when gearbox fails,causing large economic loss and even may cause human life accident.	$1.5 < S_F$

Thermal factor f_4

Gearbox without cooling or with fan

Ambient temperature	Operating cycle per hour 100	80	60	40	20
10°C	1.11	1.31	1.60	2.14	3.64
20°C	1.00	1.18	1.44	1.93	3.28
30°C	0.88	1.04	1.27	1.70	2.89
40°C	0.75	0.89	1.08	1.45	2.46
50°C	0.63	0.74	0.91	1.22	2.07

Thermal factor f_5

Gear unit with water-oil cooler

Ambient temperature	Operating cycle per hour 100	80	60	40	20
10°C	1.05	1.23	1.50	2.03	3.41
20°C	1.00	1.17	1.43	1.93	3.25
30°C	0.93	1.09	1.33	1.79	3.02
40°C	0.87	1.02	1.24	1.68	2.83
50°C	0.81	0.95	1.16	1.56	2.63

⚠ Note: Operating cycle ED: $ED=\frac{tf}{tf+tr} \cdot 100\%$

tf: Working time with loading tr: Stop time.

Vertical mounted gearbox oil supply factor . For horizontally mounted gearbox f8=1.0; When forced lubrication applied,f8=1.05 f_8

Gearbox type	Oil supply method	Without auxiliary cooling device	With cooling fan	With cooling coil	With fan and cooling coil
H2..V,H3..V H4..V	Dip-in lubrication	0.95	*	0.95	*
	Forced lubrication	1.15	*	1.05	*
B2..V,B3..V B4..V	Dip-in lubrication	0.95	0.95	0.95	0.95
	Forced lubrication	1.15	1.10	1.10	1.10

* Please consult us.

Type designation

B 3 12 H S A - C56 - F280 + U F 21

- **Series**
  - H helical gearbox
  - B bevel-helical gearbox
- **Number of Gear Stage**
  - 2-stage/3-stage/4-stage
- **Size**
- **Mounting Mode**
  - H=Horizontal mounting
  - V=Vertical mounting
- **Output Shaft Mode**
  - S=Solid shaft with parallel key
  - H=Hollow shaft with parallel key
  - D=Hollow shaft with shrink disc
  - K=Hollow shaft with involute spline
- **Shaft Assembly Code**
  - A/B/C/D/E/F/G/H/I
- **Nominal Ratio Code**
- **Input Part**
  - M,MH,MP,YZ=Motor
  - AF=AF Motorconnection flange
  - S=SInput shatf
- **Accessoriesand Specific Configuration**

4 服务系数 4 Service Factors

表1	Table 1	被驱动设备系数 Factor for driven machine		
被驱动设备	Driven machines	日带载运行时间 Effective daily operating period under load in hours		
		≤ 2	> 2-10	> 10
污水处理	Waste water treatment			
浓缩器(中心传动)	Thickeners (central drive)	-	-	1.2
压滤器	Filter presses	1.0	1.3	1.5
絮凝器	Flocculation apparata	0.8	1.0	1.3
曝气机	Aerators	-	1.8	2.0
搂集设备	Raking equipment	1.0	1.2	1.3
纵向、回转组	Combined longitudinal			
合式接集装置	and rotary rakes	1.0	1.3	1.5
浓缩器	Pre-thickeners	-	1.1	1.3
螺杆泵	Screw pumps	-	1.3	1.5
水轮机泵	Water turbines Pumps	-	-	2.0
离心泵	Centrifugal pumps	1.0	1.2	1.3
容积式泵	Positive-displacement pumps			
1个活塞	1 piston	1.3	1.4	1.8
>1个活塞	> 1piston	1.2	1.4	1.5
挖泥机	Dredgers			
斗式运输机	Bucket conveyors	-	1.6	1.6
倾卸装置	Dumping devices	-	1.3	1.5
履带式行走机构	Carterpillar travelling gears	1.2	1.6	1.8
斗式挖掘机	Bucket wheel excavators			
用于捡拾	as pick-up	-	1.7	1.7
用于粗料	for primitive material	-	2.2	2.2
切碎机	Cutter heads	-	2.2	2.2
行走机构 *	Traversing gears*	-	1.4	1.8
弯板机	Plate bending machines	-	1.0	1.0
化学工业	Chemical industry			
挤出机	Extruders	-	-	1.6
调浆机	Dough mills	-	1.8	1.8
橡胶砑光机	Rubber calenders	-	1.5	1.5
冷却圆筒	Cooling drums	-	1.3	1.4
混料机,用于	Mixers for			
均匀介质	uniform media	1.0	1.3	1.4
非均匀介质	non-uniform media	1.4	1.6	1.7
搅拌机，用于	Agitators for media with			
密度均匀介质	uniform density	1.0	1.3	1.5
不均匀介质	non-uniform density	1.2	1.4	1.6
不均匀气体吸收	non-uniform gas absorption	1.4	1.6	1.8
烘炉	Toasters	1.0	1.3	1.5
离心机	Centrifuges	1.0	1.2	1.3
金属加工设备	Metal working mills			
翻板机	Plate tilters	1.0	1.0	1.2
推钢机	Ingot pushers	1.0	1.2	1.2
绕线机	Winding machines	-	1.6	1.6
冷床横移架	Cooling bed transfer frames	-	1.5	1.5
辊式矫直机	Roller straighteners	-	1.6	1.6
辊道	Roller tables			
连续式	continuous	-	1.5	1.5
间歇式	intermittent	-	2.0	2.0
可逆式轧管机	Reversing tube mills	-	1.8	1.8
剪切机	Shears			
连续式 *	continuous*	-	1.5	1.5
曲柄式 *	crank type*	1.0	1.0	1.0
连铸机驱动装置	Continuous casting drivers	-	1.4	1.4
轧机	Rolls			
可逆式开坯机	Reversing blooming mills	-	2.5	2.5
可逆式板坯轧机	Reversing slabbing mills	-	2.5	2.5
可逆式线材轧机	Reversing wire mills	-	1.8	1.8
可逆式薄板轧机	Reversing sheet mills	-	2.0	2.0
可逆式中厚板轧机	Reversing plate mills	-	1.8	1.8
辊缝调节驱动装置	Roll adjustment drives	0.9	1.0	-

表1	Table 1	被驱动设备系数 Factor for driven machine		
被驱动设备	Driven machines	日带载运行时间 Effective daily operating period under load in hours		
		≤ 2	> 2-10	> 10
输送机械	Conveyors			
斗式输送机	Bucket conveyors	-	1.4	1.5
绞车	Hauling winches	1.4	1.6	1.6
卷扬机	Hoists	-	1.5	1.8
皮带输送机≤150kW	Belt conveyors≤150kW	1.0	1.2	1.3
皮带输送机≥150kW	Belt conveyors≥150kW	1.1	1.3	1.4
货用电梯 *	Goods lifts*	-	1.2	1.5
客用电梯 *	Passenger lifts*	-	1.5	1.8
刮板式输送机	Apron conveyors	-	1.2	1.5
自动扶梯	Escalators	1.0	1.2	1.4
轨道行走机构	Rail travelling gears	-	1.5	-
变频装置	Frequency converters	-	1.8	2.0
往复式压缩机	Reciprocating compressors	-	1.8	1.9
起重机械 **	Cranes**			
回转机构 *	Slewing gears*		1.4	1.8
俯仰机构	Luffing gears		1.1	1.4
行走机构	Travelling gears		1.6	2.0
提升机构	Hoisting gears		1.1	1.4
转臂式起重机	Derricking jib cranes		1.2	1.6
冷却塔	Cooling towers			
冷却塔风扇	Cooling tower fans	-	-	2.0
风机（轴流和离心式）	Blowers (axial and radial)	-	1.4	1.5
食品工业	Food industry			
蔗糖生产	Cane sugar production			
甘蔗切碎机 *	Cane knives *	-	-	1.7
甘蔗碾磨机	Cane mills	-	-	1.7
甜菜糖生产	Beet sugar production			
甜菜绞碎机	Beet cossettes macerators,	-	-	1.2
榨取机，机械制	Extraction plants, Techanical			
冷机、蒸煮机	refrigerators, Juice boilers,	-	-	1.4
甜菜清洗机	Sugar beet washing machines,			
甜菜切碎机	Sugar beet cutters	-	-	1.5
造纸机械	Paper machines			
各种类型 ***	of all-kind***	-	1.8	2.0
碎浆机驱动装置	Pulper drives	On request		
离心式压缩机	Centrifugal compressors	-	1.4	1.5
索道缆车	Cableways			
运货索道	Material ropeways	-	1.3	1.4
往返系统空中索道	To- and fro system aerial ropeways	-	1.6	1.8
T型杆升降机	T-bar lifts	-	1.3	1.4
连续索道	Continuous ropeways	-	1.4	1.6
水泥工业	Cement industry			
混凝土搅拌器	Concrete mixers	-	1.5	1.5
破碎机 *	Breakers*	-	1.2	1.4
回转窑	Rotary kilns	-	-	2.0
管式磨机	Tube mills	-	-	2.0
选粉机	Separators	-	1.6	1.6
辊压机	Roll crushers	-	-	2.0

表1	Table 1	被驱动设备系数	Factor for driven machine	
被驱动设备	Driven machines	日带载运行时间	Effective daily operating period under load in hours	
		≤ 2	＞ 2-10	＞ 10
木材工业	Wood industry			
剥皮机	Bark peeler			
进给传动	Feed drive	1.25	1.25	1.50
主传动	Main drive	1.75	1.75	1.75
运送机	Transporter			
燃烧器、反复锯、转塔式、转运输送	Burner, band saw, turret lathe, transportation	1.25	1.25	1.50
主要载荷、重载	mainly heavy load	1.50	1.50	1.50
主原木、地坯	mainly raw log	1.75	1.75	2.00
输送链	Conveyor chain			
地板	Parquet	1.50	1.50	1.50
生材	Unprocessed materials	1.50	1.50	1.75
切割链	Cutting chain			
锯传动、牵引	Saw drive and traction	1.50	1.50	1.75
剥皮筒	Barking drum	1.75	1.75	2.00
进给传动	Feed drive			
轧边、修木、刨床进给、分类台、自动倾斜升降	Edge banding, wood sanding Planer feeding, sorter Automatic inclination and lift	1.25	1.25	1.50
多轴送进、原木搬运和旋转	Multi-spindle feeding Log transport and turning	1.75	1.75	1.75
搬运	Transport			
料盘、胶合板车床传动、输送链、起重式	Delivery plate Plywood lathe drive Conveyor chain, crane type	1.50	1.50	1.75
塑料工业	Plastic industry			
碾磨机、复式磨、涂料、涂膜、输送管、拉杆、薄型	Grinding mill, compound millCoating and film coating Pipe, pull rod, thin plastic manufacture	1.25	1.25	1.25
管型、拔桩机	Tube, pile drawer accessories	1.25	1.25	1.50
连续混合机、压延机、吹膜、欲塑化	Continuous mixer, calender Film blower, plasticizer	1.50	1.50	1.50
分批混合机	Batch mixer	1.75	1.75	1.75
橡胶工业	Rubber industry			
连续式强力内式拌合机、混合轧机、分批下料碾磨机、(双光棍式除外)精炼机、压延机	Continuous powerful internal stirrerRoller mixer, batch charger Crusher(except double rolls) Refiner, calender	1.50	1.50	1.50
双棍式夹持进给及混合碾磨机	Double-roller clamp feedingMixer grinder	1.25	1.25	1.50
分批式强力内式拌合机、双光棍式单槽纹棍碾碎机加热器、双光棍式	Batch powerful internal stirrer, Double roll single groove rollergrinder, Crusher heater, double rolls, Batch charging grinder	1.75	1.75	1.75
分批下料碾磨机波形棍式碾碎机	Wave roll crusher	2.00	2.00	2.00
发电机和励磁机	Generator and Exciter	1.00	1.00	1.25
锤式破碎机	Hammer crusher	1.75	1.75	2.00
砂碾机	Sand roller	1.25	1.25	1.50

⚠ 注：1. 被驱动设备使用功率P2的确定：

*）按最大的扭矩确定额定功率。

**）实际的服务系数应根据准确的载荷分类进行选择,具体可咨询我司。

***）检验热容量是绝对必要的。

2. 所列各项系数均为经验值。使用这些系数的前提条件是，所述机械设备应符合通常的设计规范和载荷条件。

如遇特殊情况，敬请垂询。

3. 对于那些未列入此表的工作机械，敬请垂询。

⚠ Note: 1.Determine required power P2 of the driven equipment;

*) Determine rated power according to maximum torque

**) The actual service factor should be selected according to accurate loading classification, for specific information, please consult us

***) It is necessary to check thermal capacity.

2. The factors are experience value.The premise of using these factors is that the above mechanical equipment should conform to commondesign regulation and loading conditions.If there is special situation,please consult us.

3. For machines that are not listed in this table, please consult us.

5 常用代号说明 5 Key to symbols

Symbols	说明	Instruction	Unit
i	实际减速比	Actua ratio	/
iN	公称减速比	Nominal ratio	
iex	精确减速比	Exact ratio	
T2	输出扭矩	Output torque	N • m
T2N	额定输出扭矩	Reted output torque	
T_A	输入轴上的扭矩，例如峰值操作，启动或制动扭矩	Max. Torque occurring on input shaft, e.g. Peak operating, starting or braking torque	
Tn2atmax	在最高转速时的额定输出扭矩	Nominal output torque at highest speed	
Tn2atmin	在最低转速时的额定输出扭矩	Nominal output torque at lowest speed	
P1N	减速机额定输入功率	Rated input power	kW
PGA	齿轮箱不带冷却装置的额定发热容量	Nominal thermal capacity of gearbox without auxiliary cooling equipment	
PGB	齿轮箱带冷却风扇的额定热容量	Nominal thermal capacity gearbox with cooling fan	
PGC	齿轮箱带冷却盘管的额定热容量	Nominal thermal capacity of gearbox with cooling coil	
PGD	齿轮箱带冷却盘管和风扇或带水油冷却器的额定热容量	Normal thermal capacity of gearbox with water-oil cooler	
P1	输入功率	Input power	
P2	被驱动设备使用功率	Required power of driven machine	
f_1	被驱动设备系数	Driven machine factor	/
f2	原动机系数	Prime mover factor	
f_3	峰值负荷系数	Peakload factor	
f4	环境温度系数（不带辅助冷却装置或仅带冷却风扇）	Thermal factor(Without auxiliary cooling, or witho fan cooling)	
f_5	环境温度系数（带冷却盘管或带冷却盘管和风扇）	Thermal factor(with water-oil cooler)	
f8	立式安装齿轮箱供油系数	Oil supply factor for vertical gearbox	
S_F	齿轮箱可靠度系数	Safety factor of gearbox	
n_1	输入转速	Input speed	r/min
n2	输出转速	Output speed	
n2N	公称输出转速	Nominal output speed	
η	效率	Efficiency	/
f	电机频率	Motor frequency	Hz
Um	电机电压	Motor voltage	V
ED	每小时工作周期	Operating cycle per hour	%

6 选型举例 6 Selection example

已知条件：	Known conditions:
原动机： 电机功率：185kW 电机转速：n1=1450r/min 最大启动扭矩：TA=1850N.m （由用户提供数据，如果无法提供则按照电机额定扭矩的1.6倍估算） 被驱动设备（工作机）： 设备名称：皮带输送机 设备转速：n2=26r/min 使用功率：P2=155kW 工作制：12小时/天 每小时启动次数：7 每小时工作周期：100% 环境温度：40℃ 安装空间：室外安装 海拔高度：500m 齿轮箱： 螺旋锥齿轮-斜齿齿轮箱，卧式安装，带平键实心轴输出， 轴布置形式 C 输出轴旋转方向：面向输出轴顺时针旋转 配逆止器（附件代号UB11）	**Prime mover** Motor power: 90kW Motor speed: n1=1450r/min Maximum starting torque: TA=860N.m (This value is usually provided by the usersIf not,normal torquex1.6 preails) **Driven equipment (working machine):** Type: Belt conveyor Speed: nz=33r/min Required power: P2=72kW Duty: 12 hours/day Starts per hour: 7 Operating cycle per hour: 100% Ambient temperature: 40C Place of installation: Outdoor mounting Altitude: 500m **Gear box:** Bevel-helical gear unit, horizontal mounting. with parallel key solid shaft output Shaft arrangement form C Output shaft direction of rotation: run clockwise to output shaft With backstop (accessory code UB11)
选型步骤：	**Selection procedure:**
1.计算速比： i=n1/n2=1450/26=55.8 iN=C56 2.确定齿轮箱的额定功率： P1=P2/η=155/(94%)=165kW P1N≥P1 • f1 • f2 • S-F=165x1.4x1x1.4=323kW 根据传动能力表B3，机座号14 P1N=340kW 3.33 • P1=3.33x165=549kW≥P1N 满足要求 3.峰值扭矩校核： P1N≥TA • n1 • f3/9550 =1850×1450×0.65/9550=183kW P1N=340kW≥183kW 满足要求 4.校核热容量： PGA • f4 • f8=135×0.75×1=101kW≤P1=165kW 不满足要求 PGB • f4 • f8=330×0.75×1=248kW ≥P1=165kW 满足要求 所以齿轮箱配置冷却风扇可以满足热容量要求， 风扇附件代号为UF21 5.确定型号： B314HSC-C56+UF21+UB11	**1.Calculation of ratio** i=n1/n2=1450/33=439 iN=45 **2.Determine rated power of gear box** P1=P2/n=72/(94%)=76.6kW P1N=P1f1-f2 · S-F=76.6x13x1x14=139.4kWV Refer to transmission capacity table B3,select size 10 PIN=146kW 333 · P1=3.33x76.6=255.1kWPN Satisfy requirements **3.Peak torque verification** P1N≥TA · n1 · f3/9550 =860x1450x0.65/9550=84.9kW P1N=146kW=84.9kW Satisfy requirements **4.Verify thermal capacity:** PGA · f4 · f8=80.8x0.75x1=60.6kWVsP1=76.6kW Thermal capacity not sufficient PGB · f4 · f8=180x0.75x1=135kWV≥ P1=76.6kWV Thermal capacity is sufficient When gear unit with cooling fan, thermal capacity is sufficient. Fan accessory code is UF 21 **5.Determine gear unit type:** B310HSC-45+UF21+UB11

7 传动能力表

7 Transmission Capacity table

H2 (iN=1.8-5.6)

H2 (iN=1.8-5.6)

Code	i_N	n_1 (r/min)	n_{2N} (r/min)	H204			H205			H206			H207			H208		
				T_{2N} (kN·m)	i_{ex}	P_{1N} (kW)	T_{2N} (kN·m)	i_{ex}	P_{1N} (kW)	T_{2N} (kN·m)	i_{ex}	P_{1N} (kW)	T_{2N} (kN·m)	i_{ex}	P_{1N} (kW)	T_{2N} (kN·m)	i_{ex}	P_{1N} (kW)
B18	1.8	1740	967	4.5	1.781	460												
		1450	806			384												
		1150	639			304												
		960	533			254												
B20	2	1740	870	4.4	1.950	411				6.8	1.949	636						
		1450	725			343						530						
		1150	575			272						420						
		960	480			227						351						
B22	2.24	1740	777	4.7	2.305	371				6.8	2.182	568				14	2.205	1157
		1450	647			310						473						964
		1150	513			246						375						764
		960	429			205						313						638
B25	2.5	1740	696	4.5	2.583	317				6.2	2.573	439				14	2.466	1034
		1450	580			265						366						862
		1150	460			210						290						684
		960	384			175						242						571
B28	2.8	1740	621	4.6	2.758	304				6	2.792	392				15	2.744	996
		1450	518			253						326						830
		1150	411			201						259						658
		960	343			168						216						549
B32	3.15	1740	552	4.5	3.155	260				6.8	3.260	380				16.5	3.091	973
		1450	460			217						317						810
		1150	365			172						251						643
		960	305			143						210						537
B36	3.55	1740	490	3.2	3.508	166				6.8	3.612	343				16.5	3.563	844
		1450	408			139						286						703
		1150	324			110						227						558
		960	270			92						189						466
B40	4	1740	435	3.2	3.978	147				5.5	3.831	262				16.3	3.931	755
		1450	363			122						218						630
		1150	288			97						173						499
		960	240			81						144						417
B45	4.5	1740	387	3.2	4.459	131				5.3	4.354	222				15.2	4.354	636
		1450	322			109						185						530
		1150	256			86						147						420
		960	213			72						122						351
B50	5	1740	348	3.2	5.089	115				5.2	4.872	194				14.8	4.845	557
		1450	290			95						162						464
		1150	230			76						129						368
		960	192			63						107						307
B56	5.6	1740	311	3.2	5.424	107				5.2	5.410	175				14.2	5.499	471
		1450	259			90						146						392
		1150	205			71						116						311
		960	171			59						97						260

卧式安装齿轮箱
应采用强制润滑

Forced lubricati on required
on horizontal gearbox

H209			H210			H211			H212			n_{2N} (r/min)	n_1 (r/min)	i_N	Code
T_{2N} (kN·m)	i_{ex}	P_{1N} (kW)	T_{2N} (kN·m)	i_{ex}	P_{1N} (kW)	T_{2N} (kN·m)	i_{ex}	P_{1N} (kW)	T_{2N} (kN·m)	i_{ex}	P_{1N} (kW)				
												967	1740	1.8	B18
												806	1450		
												639	1150		
												533	960		
												870	1740	2	B20
												725	1450		
												575	1150		
												480	960		
28	2.238	2280				42	2.175	3518				777	1740	2.24	B22
		1900						2932				647	1450		
		1507						2325				513	1150		
		1258						1941				429	960		
28	2.523	2022				44	2.471	3245				696	1740	2.5	B25
		1685						2704				580	1450		
		1336						2145				460	1150		
		1115						1790				384	960		
29	2.915	1813				46	2.814	2978				621	1740	2.8	B28
		1511						2482				518	1450		
		1198						1968				411	1150		
		1000						1643				343	960		
29	3.325	1589				42	3.077	2487				552	1740	3.15	B32
		1324						2073				460	1450		
		1050						1644				365	1150		
		877						1372				305	960		
30	3.563	1534				42	3.431	2230	58	3.566	2964	490	1740	3.55	B36
		1279						1858			2470	408	1450		
		1014						1474			1959	324	1150		
		847						1230			1635	270	960		
30	3.850	1420				42	3.904	1960	63	4.050	2834	435	1740	4	B40
		1183						1634			2362	363	1450		
		938						1296			1873	288	1150		
		783						1082			1564	240	960		
26	4.453	1064				40	4.412	1652	67	4.613	2646	387	1740	4.5	B45
		886						1377			2205	322	1450		
		703						1092			1749	256	1150		
		587						911			1460	213	960		
24	4.975	879				40	5.066	1438	62	5.044	2240	348	1740	5	B50
		732						1199			1866	290	1450		
		581						951			1480	230	1150		
		485						794			1236	192	960		
22	5.608	715				38	5.798	1194	64	5.625	2073	311	1740	5.6	B56
		596						995			1728	259	1450		
		472						789			1370	205	1150		
		394						659			1144	171	960		

H2 (iN=6.3-22.4)

Code	i_N	n_1 (r/min)	n_{2N} (r/min)	H204			H205			H206			H207			H208		
				T_{2N} (kN·m)	i_{ex}	P_{1N} (kW)	T_{2N} (kN·m)	i_{ex}	P_{1N} (kW)	T_{2N} (kN·m)	i_{ex}	P_{1N} (kW)	T_{2N} (kN·m)	i_{ex}	P_{1N} (kW)	T_{2N} (kN·m)	i_{ex}	P_{1N} (kW)
B63	6.3	1740	276	6.7	6.33	187	11.2	6.08	312	15.2	6.24	442	20.3	6.27	586	27.5	6.19	780
		1450	230			156			260			368			488			650
		1150	183			124			206			292			387			515
		960	152			103			172			244			323			430
B71	7.1	1740	245	6.7	6.93	166	11.2	6.81	287	15.2	6.98	398	20.3	7.02	520	27.5	6.92	703
		1450	204			138			239			332			433			585
		1150	162			109			190			263			343			464
		960	135			91			158			220			287			388
B80	8	1740	218	6.7	8.19	152	11.2	8.02	256	15.2	8.23	341	20.3	7.81	463	27.5	7.70	636
		1450	181			127			213			284			386			530
		1150	144			101			169			226			306			420
		960	120			84			141			188			256			351
B90	9	1740	193	6.7	9.18	136	11.2	8.71	227	15.2	8.93	316	20.3	8.79	410	27.5	8.68	569
		1450	161			113			189			264			342			475
		1150	128			89			150			209			271			376
		960	107			74			125			174			226			314
C10	10	1740	174	6.7	9.80	118	11.2	10.2	198	15.2	10.4	274	20.3	10.1	368	27.5	10.0	499
		1450	145			98			165			228			307			416
		1150	115			77			131			181			243			330
		960	96.0			65			109			151			203			275
C11	11.2	1740	155	6.7	11.2	106	11.2	11.3	178	15.2	11.6	249	20.3	11.2	330	27.5	11.0	435
		1450	129			88			148			207			275			362
		1150	103			70			117			164			218			287
		960	85.7			58			98			137			182			240
C13	12.5	1740	139	6.7	12.5	97	11.2	11.9	162	16.5	12.3	235	20.3	12.4	294	27.5	12.2	395
		1450	116			81			135			196			245			329
		1150	92.0			64			107			155			194			261
		960	76.8			53			89			130			162			218
C14	14	1740	124	6.7	14.1	87	11.2	13.6	145	16.5	13.9	209	20.3	13.8	263	27.5	13.6	358
		1450	104			72			121			174			219			298
		1150	82.1			57			96			138			174			236
		960	68.6			48			80			115			145			197
C16	16	1740	109	6.7	15.8	75	11.2	15.2	127	16.5	15.6	188	20.3	15.6	230	27.5	15.4	318
		1450	90.6			62			106			156			192			265
		1150	71.9			50			84			124			152			210
		960	60.0			41.6			70			104			127			175
C18	18	1740	96.7	6.7	18.1	66	11.2	16.9	109	16.5	17.3	170	20.3	17.4	198	27.5	17.1	288
		1450	80.6			55			91			142			165			240
		1150	63.9			43.6			72			112			131			190
		960	53.3			36.4			60			94			109			159
C20	20	1740	87.0	6.7	19.3	59	11.2	19.8	101	16.5	20.3	147	20.3	19.7	178	27.5	19.5	255
		1450	72.5			49.3			84			122			148			213
		1150	57.5			39.1			67			97			117			169
		960	48.0			32.6			56			81			98			141
C22	22.4	1740	77.7					21.2	89	16.5	21.8	135	20.3	22.7	160	27.5	22.4	224
		1450	64.7						74			113			133			187
		1150	51.3						59			90			105			148
		960	42.9						49.0			75			88			124

H2 (iN=6.3-22.4)

H209			H210			H211			H212			n_{2N} (r/min)	n_1 (r/min)	i_N	Code
T_{2N} (kN·m)	i_{ex}	P_{1N} (kW)	T_{2N} (kN·m)	i_{ex}	P_{1N} (kW)	T_{2N} (kN·m)	i_{ex}	P_{1N} (kW)	T_{2N} (kN·m)	i_{ex}	P_{1N} (kW)				
33.7	6.28	973	44.2	6.20	1279	60	6.09	1714	74	6.09	2140	276	1740	6.3	B63
		811			1066			1428			1783	230	1450		
		643			845			1133			1414	183	1150		
		537			706			945			1180	152	960		
33.7	7.08	863	44.2	6.99	1144	60	6.91	1519	74	6.92	1898	245	1740	7.1	B71
		719			954			1266			1582	204	1450		
		570			756			1004			1255	162	1150		
		476			631			838			1047	135	960		
33.7	8.18	769	44.2	8.08	1001	60	7.87	1354	74	7.88	1685	218	1740	8	B80
		641			834			1128			1404	181	1450		
		508			662			895			1114	144	1150		
		424			552			747			930	120	960		
33.7	9.33	683	44.2	9.22	886	60	8.61	1201	74	8.62	1496	193	1740	9	B90
		569			738			1001			1247	161	1450		
		451			585			794			989	128	1150		
		377			489			663			826	107	960		
33.7	10.0	613	44.2	9.88	831	60	9.60	1080	74	9.61	1344	174	1740	10	C10
		511			692			900			1120	145	1450		
		405			549			714			888	115	1150		
		338			458			596			742	96.0	960		
33.7	10.8	547	46.5	10.7	773	60	10.9	965	74	10.9	1201	155	1740	11.2	C11
		456			644			804			1001	129	1450		
		362			511			638			794	103	1150		
		302			426			532			663	85.7	960		
33.7	12.5	491	46.5	12.3	675	60	12.3	864	74	12.4	1075	139	1740	12.5	C13
		409			562			720			896	116	1450		
		324			446			571			711	92.0	1150		
		271			372			477			593	76.8	960		
33.7	14.0	437	46.5	13.8	608	60	14.2	770	74	14.2	958	124	1740	14	C14
		364			507			642			798	104	1450		
		289			402			509			633	82.1	1150		
		241			336			425			528	68.6	960		
33.7	15.7	384	46.5	15.5	544	60	16.2	677	74	16.2	842	109	1740	16	C16
		320			453			564			702	90.6	1450		
		254			359			447			557	71.9	1150		
		212			300			373			465	60.0	960		
33.7	17.4	338	48.5	17.2	495	60	17.9	598	74	17.9	744	96.7	1740	18	C18
		282			412			498			620	80.6	1450		
		224			327			395			492	63.9	1150		
		187			273			330			410	53.3	960		
33.7	19.6	306	48.5	19.3	443	60	20.1	540	74	20.1	672	87.0	1740	20	C20
		255			370			450			560	72.5	1450		
		202			293			357			444	57.5	1150		
		169			245			298			371	48.0	960		
33.1	21.7	269	48.5	21.4	403	60	22.1	474	74	22.2	600	77.7	1740	22.4	C22
		224			336			395			500	64.7	1450		
		178			266			313			397	51.3	1150		
		148			222			262			331	42.9	960		

H2 (iN=3.15-20)

Code	i_N	n_1 (r/min)	n_{2N} (r/min)	H213 T_{2N} (kN·m)	H213 i_{ex}	H213 P_{1N} (kW)	H214 T_{2N} (kN·m)	H214 i_{ex}	H214 P_{1N} (kW)	H215 T_{2N} (kN·m)	H215 i_{ex}	H215 P_{1N} (kW)
B32	3.15	1740	552.4				80	3.061	4762			
		1450	460.3						3968			
		1150	365.1						3147			
		960	304.8						2627			
B36	3.55	1740	490.1				90	3.429	4782			
		1450	408.5						3985			
		1150	323.9						3161			
		960	270.4						2638			
B40	4	1740	435.0				100	3.929	4637			
		1450	362.5						3864			
		1150	287.5						3065			
		960	240.0						2559			
B45	4.5	1740	386.7				100	4.387	4153			
		1450	322.2						3461			
		1150	255.6						2745			
		960	213.3						2291			
B50	5	1740	348.0				90	4.916	3336			
		1450	290.0						2780			
		1150	230.0						2205			
		960	192.0						1840			
B56	5.6	1740	310.7				90	5.558	2950			
		1450	258.9						2459			
		1150	205.4						1950			
		960	171.4						1628			
B63	6.3	1740	276.2	86	5.878	2666	117	5.882	3624	143	6.000	4342*
		1450	230.2			2221			3020			3619
		1150	182.5			1762			2395			2870
		960	152.4			1471			1999			2396
B71	7.1	1740	245.1	86	6.583	2380	117	6.588	3236	143	7.022	3711*
		1450	204.2			1983			2696			3092
		1150	162.0			1573			2139			2452
		960	135.2			1313			1785			2047
B80	8	1740	217.5	86	7.543	2077	117	7.549	2824	143	8.000	3257*
		1450	181.3			1731			2353			2714
		1150	143.8			1373			1866			2152
		960	120.0			1146			1558			1797
B90	9	1740	193.3	86	8.423	1860	117	8.429	2529	143	8.742	2980*
		1450	161.1			1550			2108			2484
		1150	127.8			1230			1671			1970
		960	106.7			1026			1395			1644
C10	10	1740	174.0	86	9.439	1660	117	9.446	2257	143	9.882	2636*
		1450	145.0			1383			1881			2197
		1150	115.0			1097			1491			1742
		960	96.0			916			1245			1455
C11	11.2	1740	155.4	86	10.671	1468	117	10.679	1996	143	10.900	2390*
		1450	129.5			1224			1663			1992
		1150	102.7			970			1319			1580
		960	85.7			810			1101			1319
C13	12.5	1740	139.2	86	11.918	1315	117	11.927	1787	143	12.208	2134*
		1450	116.0			1096			1489			1779
		1150	92.0			869			1181			1411
		960	76.8			725			986			1178
C14	14	1740	124.3	86	13.621	1150	117	13.631	1564	143	13.708	1901*
		1450	103.6			959			1303			1584
		1150	82.1			760			1034			1256
		960	68.6			635			863			1049
C16	16	1740	108.8	86	15.762	994	117	15.774	1351	143	15.164	1718*
		1450	90.6			828			1126			1432
		1150	71.9			657			893			1136
		960	60.0			548			746			948
C18	18	1740	96.7	86	17.487	896	117	17.500	1218	143	17.209	1514*
		1450	80.6			747			1015			1262
		1150	63.9			592			805			1001
		960	53.3			494			672			835
C20	20	1740	87.0	86	19.526	802	117	19.540	1091			
		1450	72.5			669			909			
		1150	57.5			530			721			
		960	48.0			443			602			

卧式安装齿轮箱应采用强制润滑

* 敬请垂询

Forced lubricati on required on horizontal gearbox

* On request

H2 (iN=3.15-20)

H216 T_{2N} (kN·m)	H216 i_{ex}	H216 P_{1N} (kW)	H217 T_{2N} (kN·m)	H217 i_{ex}	H217 P_{1N} (kW)	H218 T_{2N} (kN·m)	H218 i_{ex}	H218 P_{1N} (kW)	n_{2N} (r/min)	n_1 (r/min)	i_N	Code
125	3.148	7235							552.4	1740	3.15	B32
		6029							460.3	1450		
		4782							365.1	1150		
		3992							304.8	960		
144	3.684	7122				172	3.474	9021	490.1	1740	3.55	B36
		5935						7517	408.5	1450		
		4707						5962	323.9	1150		
		3929						4977	270.4	960		
130	4.198	5642				195	4.055	8762	435.0	1740	4	B40
		4702						7301	362.5	1450		
		3729						5791	287.5	1150		
		3113						4834	240.0	960		
130	4.587	5164				190	4.628	7480	386.7	1740	4.5	B45
		4303						6233	322.2	1450		
		3413						4944	255.6	1150		
		2849						4127	213.3	960		
135	5.185	4744				177	5.251	6142	348.0	1740	5	B50
		3953						5118	290.0	1450		
		3135						4059	230.0	1150		
		2617						3388	192.0	960		
130	5.719	4142	215	5.462	5977	177	5.726	5632	310.7	1740	5.6	B56
		3451			4740			4693	258.9	1450		
		2737			3957			3722	205.4	1150		
		2285						3107	171.4	960		
176	5.996	5348*	215	6.374		255	6.305		276.2	1740	6.3	B63
		4457			5121				230.2	1450		
		3535			4062			4870	182.5	1150		
		2951			3391			4065	152.4	960		
176	7.016	4570*	215	7.276		255	7.359		245.1	1740	7.1	B71
		3809			4486				204.2	1450		
		3021			3558			4173	162.0	1150		
		2522			2970			3483	135.2	960		
176	7.994	4011*	215	8.255	4745*	255	8.400		217.5	1740	8	B80
		3343			3954			4609	181.3	1450		
		2651			3136			3656	143.8	1150		
		2213			2618			3052	120.0	960		
176	8.736	3671*	215	9.003	4351*	255	9.530	4875*	193.3	1740	9	B90
		3059			3626			4063	161.1	1450		
		2426			2876			3222	127.8	1150		
		2025			2401			2690	106.7	960		
176	9.875	3247*	215	10.119	3871*	255	10.393	4470*	174.0	1740	10	C10
		2706			3226			3725	145.0	1450		
		2146			2559			2955	115.0	1150		
		1792			2136			2466	96.0	960		
176	10.892	2944*	215	11.101	3529*	255	11.681	3977*	155.4	1740	11.2	C11
		2454			2941			3314	129.5	1450		
		1946			2332			2629	102.7	1150		
		1624			1947			2194	85.7	960		
176	12.199	2629*	215	12.392	3161*	255	12.816	3625*	139.2	1740	12.5	C13
		2191			2634			3021	116.0	1450		
		1737			2089			2396	92.0	1150		
		1450			1744			2000	76.8	960		
176	13.698	2341*	215	13.875	2823*	255	14.306	3248*	124.3	1740	14	C14
		1951			2353			2706	103.6	1450		
		1547			1866			2146	82.1	1150		
		1292			1558			1792	68.6	960		
176	15.153	2116*	215	15.285	2563*	255	16.017	2901*	108.8	1740	16	C16
		1764			2136			2417	90.6	1450		
		1399			1694			1917	71.9	1150		
		1168			1414			1600	60.0	960		
176	17.196	1865*	215	17.253	2271*	255	17.646	2633*	96.7	1740	18	C18
		1554			1892			2194	80.6	1450		
		1232			1501			1740	63.9	1150		
		1029			1253			1453	53.3	960		
						255	19.917	2333*	87.0	1740	20	C20
								1944	72.5	1450		
								1542	57.5	1150		
								1287	48.0	960		

H2 (iN=8-20) H2 (iN=8-20)

Code	i_N	n_1 (r/min)	n_{2N} (r/min)	H219			H220			H221			H222		
				T_{2N} (kN·m)	i_{ex}	P_{1N} (kW)	T_{2N} (kN·m)	i_{ex}	P_{1N} (kW)	T_{2N} (kN·m)	i_{ex}	P_{1N} (kW)	T_{2N} (kN·m)	i_{ex}	P_{1N} (kW)
B80	8	1740	217.5	330	8.047	*				460	8.047	*			
		1450	181.3			*						*			
		1150	143.8			4938*						*			
		960	120.0			4122						5746			
B90	9	1740	193.3	330	8.824	*	380	9.106	*	460	8.824	*	520	8.880	*
		1450	161.1			*			*			*			*
		1150	127.8			4504*			5025*			*			*
		960	106.7			3760			4195			5240			5887
C10	10	1740	174.0	330	9.963	*	380	9.985	*	460	9.963	*	520	9.737	*
		1450	145.0			5029*			*			*			*
		1150	115.0			3989*			4583*			*			*
		960	96.0			3330			3826			4641			5368
C11	11.2	1740	155.4	330	11.176	5380*	380	11.274	*	460	11.176	*	520	10.994	*
		1450	129.5			4483*			5118*			*			*
		1150	102.7			3556			4059*			4956*			*
		960	85.7			2968			3388			4138			4755
C13	12.5	1740	139.2	330	12.641	4756*	380	12.647	*	460	12.641	*	520	12.333	*
		1450	116.0			3964			4562*			*			*
		1150	92.0			3144			3618*			4382*			5077*
		960	76.8			2624			3020			3658			4238
C14	14	1740	124.3	330	14.074	4272*	380	14.304	4840*	460	14.074	*	520	13.949	*
		1450	103.6			3560			4034			4963*			*
		1150	82.1			2824			3199			3936*			4489*
		960	68.6			2357			2670			3286			3747
C16	16	1740	108.8	330	15.736	3821*	380	15.926	4347*	460	15.736	5326*	520	15.531	*
		1450	90.6			3184			3623			4438*			5084*
		1150	71.9			2525			2873			3520*			4032*
		960	60.0			2108			2399			2939			3366
C18	18	1740	96.7	330	17.538	3428*	380	17.807	3888*	460	17.538	4779*	520	17.365	5456*
		1450	80.6			2857			3240			3982*			4547*
		1150	63.9			2266			2570			3158*			3606*
		960	53.3			1891			2145			2637			3010
C20	20	1740	87.0				380	19.846	3489*				520	19.354	4895*
		1450	72.5						2907						4079*
		1150	57.5						2306						3235*
		960	48.0						1925						2701

卧式安装齿轮箱应采用强制润滑 Forced lubricati on required on horizontal gearbox

* 敬请垂询 * On request

H223			H224			H225			H226			n_{2N} (r/min)	n_1 (r/min)	i_N	Code
T_{2N} (kN·m)	i_{ex}	P_{1N} (kW)	T_{2N} (kN·m)	i_{ex}	P_{1N} (kW)	T_{2N} (kN·m)	i_{ex}	P_{1N} (kW)	T_{2N} (kN·m)	i_{ex}	P_{1N} (kW)				
640	7.711	*										217.5	1740	8	B80
		*										181.3	1450		
		*										143.8	1150		
		8343*										120.0	960		
640	8.442	*	725	8.739	*							193.3	1740	9	B90
		*			*							161.1	1450		
		*			*							127.8	1150		
		7621*			8340*							106.7	960		
640	9.722	*	725	9.568	*	860	9.893	*	1030	9.914	*	174.0	1740	10	C10
		*			*			*			*	145.0	1450		
		*			*			*			*	115.0	1150		
		6617*			7617*			8739*			10444*	96.0	960		
640	10.727	*	725	11.018	*	860	11.324	*	1030	11.347	*	155.4	1740	11.2	C11
		*			*			*			*	129.5	1450		
		*			*			*			*	102.7	1150		
		5997			6615*			7634*			9125*	85.7	960		
640	11.887	*	725	12.157	*	860	12.447	*	1030	12.474	*	139.2	1740	12.5	C13
		*			*			*			*	116.0	1450		
		*			*			*			*	92.0	1150		
		5412			5995*			6945*			8300*	76.8	960		
640	13.809	*	725	13.472	*	860	13.744	*	1030	13.773	*	124.3	1740	14	C14
		*			*			*			*	103.6	1450		
		*			*			*			*	82.1	1150		
		4659			5410			6290*			7518*	68.6	960		
640	15.316	*	725	15.651	*	860	15.974	*	1030	16.007	*	108.8	1740	16	C16
		*			*			*			*	90.6	1450		
		*			*			*			*	71.9	1150		
		4201			4657			5412*			6468*	60.0	960		
640	17.064	*	725	17.358	*	860	17.647	*	1030	17.684	*	96.7	1740	18	C18
		*			*			*			*	80.6	1450		
		*			*			*			*	63.9	1150		
		3770			4199			4899*			5855*	53.3	960		
			725	19.339	*							87.0	1740	20	C20
					*							72.5	1450		
					*							57.5	1150		
					3769							48.0	960		

卧式安装齿轮箱应采用强制润滑 Forced lubricati on required on horizontal gearbox

* 敬请垂询 * On request

H3 (iN=16-100)

Code	i_N	n_1 (r/min)	n_{2N} (r/min)	H305 T_{2N} (kN·m)	H305 i_{ex}	H305 P_{1N} (kW)	H306 T_{2N} (kN·m)	H306 i_{ex}	H306 P_{1N} (kW)	H307 T_{2N} (kN·m)	H307 i_{ex}	H307 P_{1N} (kW)	H308 T_{2N} (kN·m)	H308 i_{ex}	H308 P_{1N} (kW)
C16	16	1740	109.0	11.6	15.0	131	17.5	15.4	202	21.7	15.5	246	29.0	15.3	328
		1450	90.6			109			169			205			273
		1150	71.9			87			134			162			217
		960	60.0			72			112			136			181
C18	18	1740	96.7	11.6	17.1	117	17.5	17.5	179	21.7	16.9	218	29.0	16.7	301
		1450	80.6			97			150			182			251
		1150	63.9			77			119			144			199
		960	53.3			64			99			120			166
C20	20	1740	87.0	11.6	19.8	105	17.5	20.3	156	21.7	20.0	197	29.0	19.8	257
		1450	72.5			88			130			164			214
		1150	57.5			69			103			130			170
		960	48.0			58			86			108			142
C22	22.4	1740	77.7	11.6	21.6	94	17.5	22.1	144	21.7	22.4	175	29.0	22.2	231
		1450	64.7			78			120			146			192
		1150	51.3			62			95			116			153
		960	42.9			52			79			97			127
C25	25	1740	69.6	11.6	24.3	84	17.5	24.9	129	21.7	24.0	157	29.0	23.7	217
		1450	58.0			70			107			131			181
		1150	46.0			56			85			104			143
		960	38.4			46.3			71			87			120
C28	28	1740	62.1	11.6	26.7	76	17.5	27.4	116	21.7	27.4	142	29.0	27.1	191
		1450	51.8			63			97			118			159
		1150	41.1			50			77			94			126
		960	34.3			41.7			64			78			105
C32	31.5	1740	55.2	11.6	30.3	67	17.5	31.1	103	21.7	31.0	126	29.0	30.6	170
		1450	46.0			56			86			105			142
		1150	36.5			44.4			68			83			113
		960	30.5			37.1			57			70			94
C36	35.5	1740	49.0	11.6	35.2	59	17.5	36.1	90	21.7	36.6	110	29.0	36.2	145
		1450	40.8			49.0			75			92			121
		1150	32.4			38.9			59			73			96
		960	27.0			32.4			49			61			80
C40	40	1740	43.5	11.6	38.3	53	18.5	39.3	83	21.7	41.1	100	29.0	40.5	131
		1450	36.3			44.0			69			83			109
		1150	28.8			34.9			55			66			86
		960	24.0			29.1			45.6			55			72
C45	45	1740	38.7	11.6	43.1	46.8	18.5	44.2	74	21.7	43.8	86	30.0	43.3	122
		1450	32.2			39.0			62			72			102
		1150	25.6			30.9			48.9			57			81
		960	21.3			25.8			40.8			47.7			68
C50	50	1740	34.8	11.6	47.3	42.0	18.5	48.5	68	21.7	50.2	79	30.0	49.5	108
		1450	29.0			35.0			56			66			90
		1150	23.0			27.8			44.8			52			71
		960	19.2			23.2			37.4			43.7			60
C56	56	1740	31.1	11.6	54.6	37.2	18.5	56.0	59	21.7	55.8	71	30.0	55.0	97
		1450	25.9			31.0			49.3			59			81
		1150	20.5			24.6			39.1			47			64
		960	17.1			20.5			32.6			39.1			54
C63	63	1740	27.6	11.6	58.2	33.6	18.5	59.7	56	21.7	63.2	62	30.0	62.4	86
		1450	23.0			28.0			46.4			52			72
		1150	18.3			22.2			36.8			41.2			57
		960	15.2			18.5			30.7			34.4			47.7
C71	71	1740	24.5	11.6	67.2	28.8	18.5	69.0	48.5	21.7	70.9	54	30.0	69.9	78
		1450	20.4			24.0			40.4			45.0			65
		1150	16.2			19.0			32.1			35.7			52
		960	13.5			15.9			26.8			29.8			43.0
C80	80	1740	21.8	11.6	76.4	26.4	18.5	78.4	42.9	21.7	80.9	49.2	30.0	79.8	68
		1450	18.1			22.0			35.8			41.0			57
		1150	14.4			17.4			28.4			32.5			45.2
		960	12.0			14.6			23.7			27.1			37.7
C90	90	1740	19.3	11.6	84.9	22.8	18.5	87.1	38.8	21.7	86.2	44.4	30.0	85.1	62.4
		1450	16.1			19.0			32.4			37.0			52.0
		1150	12.8			15.1			25.7			29.3			41.2
		960	10.7			12.6			21.4			24.5			34.4
D10	100	1740	17.4												
		1450	14.5												
		1150	11.5												
		960	9.6												

H3 (iN=16-100)

H309 T_{2N} (kN·m)	H309 i_{ex}	H309 P_{1N} (kW)	H310 T_{2N} (kN·m)	H310 i_{ex}	H310 P_{1N} (kW)	H311 T_{2N} (kN·m)	H311 i_{ex}	H311 P_{1N} (kW)	H312 T_{2N} (kN·m)	H312 i_{ex}	H312 P_{1N} (kW)	n_{2N} (r/min)	n_1 (r/min)	i_N	Code
35.7	15.4	407	47	15.2	535	64	15.3	724	78	15.3	888	109.0	1740	16	C16
		339			446			603			740	90.6	1450		
		269			354			478			587	71.9	1150		
		224			295			399			490	60.0	960		
35.7	17.2	362	47	17.0	476	64	17.1	643	78	17.1	789	96.7	1740	18	C18
		301			396			536			658	80.6	1450		
		239			314			425			522	63.9	1150		
		200			262			355			435	53.3	960		
35.7	20.3	325	47	20.1	428	64	19.0	579	78	19.0	710	87.0	1740	20	C20
		271			357			482			592	72.5	1450		
		215			283			383			470	57.5	1150		
		180			236			319			392	48.0	960		
35.7	22.0	291	47	21.8	382	64	21.4	517	78	21.5	634	77.7	1740	22.4	C22
		242			319			431			529	64.7	1450		
		192			253			342			419	51.3	1150		
		160			211			285			350	42.9	960		
35.7	25.7	260	47	25.4	343	64	24.7	462	78	24.7	568	69.6	1740	25	C25
		217			285			385			474	58.0	1450		
		172			226			305			376	46.0	1150		
		144			189			255			314	38.4	960		
35.7	28.5	233	47	28.2	306	64	27.2	416	78	27.3	507	62.1	1740	28	C28
		194			255			347			423	51.8	1450		
		154			202			275			335	41.1	1150		
		128			169			230			280	34.3	960		
35.7	29.9	208	47	29.5	272	64	32.0	370	78	32.1	450	55.2	1740	31.5	C32
		173			227			308			375	46.0	1450		
		137			180			244			297	36.5	1150		
		115			150			204			248	30.5	960		
35.7	35.2	182	47	34.8	241	64	35.6	324	78	35.7	394	49.0	1740	35.5	C36
		152			201			270			328	40.8	1450		
		121			159			214			260	32.4	1150		
		101			133			179			217	27.0	960		
35.7	38.2	164	47	37.7	214	64	40.1	293	78	40.2	356	43.5	1740	40	C40
		137			178			244			297	36.3	1450		
		109			141			194			236	28.8	1150		
		91			118			162			197	24.0	960		
35.7	44.6	143	47	44.1	190	64	46.3	254	78	46.3	308	38.7	1740	45	C45
		119			159			212			257	32.2	1450		
		94			126			168			204	25.6	1150		
		79			105			140			170	21.3	960		
35.7	49.4	130	47	48.8	171	64	51.0	230	78	51.1	281	34.8	1740	50	C50
		108			143			192			234	29.0	1450		
		86			113			152			186	23.0	1150		
		72			94			127			155	19.2	960		
35.7	52.4	116	47	51.8	153	64	56.5	208	78	56.6	253	31.1	1740	56	C56
		97			127			173			211	25.9	1450		
		77			101			137			167	20.5	1150		
		64			84			115			140	17.1	960		
35.7	59.6	103	47	58.8	136	64	62.9	185	78	63.0	226	27.6	1740	63	C63
		86			113			154			188	23.0	1450		
		68			90			122			149	18.3	1150		
		57			75			102			124	15.2	960		
35.7	66.7	90	47	65.8	121	64	71.4	161	78	71.5	196	24.5	1740	71	C71
		75			101			134			163	20.4	1450		
		59			80			106			129	16.2	1150		
		50			67			89			108	13.5	960		
35.7	74.0	82	47	73.1	107	64	79.3	145	78	79.40	175	21.8	1740	80	C80
		68			89			121			146	18.1	1450		
		54			71			96			116	14.4	1150		
		45.0			59			80			97	12.0	960		
35.7	86.7	70	47	85.6	95	64	90.1	128	78	90.2	156	19.3	1740	90	C90
		58			79			107			130	16.1	1450		
		46.0			63			85			103	12.8	1150		
		38.4			52			71			86	10.7	960		
35.7	93.2	63	47	92.0	86	64	103.4	115	78	103.5	140	17.4	1740	100	D10
		52			71			96			117	14.5	1450		
		41.4			57			76			93	11.5	1150		
		34.6			47.2			64			77	9.6	960		

H3 (iN=14-112)

Code	i_N	n_1 (r/min)	n_{2N} (r/min)	H313 T_{2N} (kN·m)	H313 i_{ex}	H313 P_{1N} (kW)	H314 T_{2N} (kN·m)	H314 i_{ex}	H314 P_{1N} (kW)	H315 T_{2N} (kN·m)	H315 i_{ex}	H315 P_{1N} (kW)
C14	14	1740	124.3									
		1450	103.6									
		1150	82.1									
		960	68.6									
C16	16	1740	108.8	88	14.974	1071	120	14.985	1459	153	15.047	1853
		1450	90.6			892			1216			1544
		1150	71.9			708			964			1224
		960	60.0			591			805			1022
C18	18	1740	96.7	88	16.884	950	120	16.897	1294	153	17.091	1631
		1450	80.6			791			1078			1359
		1150	63.9			628			855			1078
		960	53.3			524			714			900
C20	20	1740	87.0	88	19.502	822	120	19.517	1120	153	19.466	1432
		1450	72.5			685			934			1193
		1150	57.5			543			740			946
		960	48.0			454			618			790
C22	22.4	1740	77.7	88	22.247	721	120	22.264	982	153	21.285	1310
		1450	64.7			601			818			1091
		1150	51.3			476			649			866
		960	42.9			398			542			723
C25	25	1740	69.6	88	23.836	673	120	23.854	917	153	23.737	1174
		1450	58.0			561			764			979
		1150	46.0			445			606			776
		960	38.4			371			506			648
C28	28	1740	62.1	88	27.606	581	120	27.626	791	153	27.005	1032
		1450	51.8			484			660			860
		1150	41.1			384			523			682
		960	34.3			320			437			570
C32	31.5	1740	55.2	88	31.127	515	120	31.150	702	153	30.553	912
		1450	46.0			429			585			760
		1150	36.5			340			464			603
		960	30.5			284			387			503
C36	35.5	1740	49.0	88	35.954	446	120	35.981	608	153	34.800	801
		1450	40.8			372			506			668
		1150	32.4			295			402			529
		960	27.0			246			335			442
C40	40	1740	43.5	88	41.014	391	120	41.045	533	153	38.051	733
		1450	36.3			326			444			611
		1150	28.8			258			352			484
		960	24.0			216			294			404
C45	45	1740	38.7	88	43.944	365	120	43.976	497	153	42.435	657
		1450	32.2			304			414			547
		1150	25.6			241			329			434
		960	21.3			201			274			362
C50	50	1740	34.8	88	47.488	338	120	47.523	460	153	48.276	577
		1450	29.0			281			383			481
		1150	23.0			223			304			382
		960	19.2			186			254			319
C56	56	1740	31.1	88	54.930	292	120	54.971	398	153	54.559	511
		1450	25.9			243			331			426
		1150	20.5			193			263			338
		960	17.1			161			219			282
C63	63	1740	27.6	88	61.370	261	120	61.415	356	153	62.655	445
		1450	23.0			218			297			371
		1150	18.3			173			235			294
		960	15.2			144			196			245
C71	71	1740	24.5	88	69.171	232	120	69.222	316	153	71.706	389
		1450	20.4			193			263			324
		1150	16.2			153			209			257
		960	13.5			128			174			214
C80	80	1740	21.8	88	76.462	210	120	76.519	286	153	79.016	353
		1450	18.1			175			238			294
		1150	14.4			139			189			233
		960	12.0			116			158			195
C90	90	1740	19.3	88	85.977	186	120	86.041	254	153	88.911	314
		1450	16.1			155			212			261
		1150	12.8			123			168			207
		960	10.7			103			140			173
D10	100	1740	17.4	88	95.211	168	120	95.282	229	153	97.769	285
		1450	14.5			140			191			238
		1150	11.5			111			152			188
		960	9.6			93			127			157
D11	112	1740	15.5							153	109.118	255
		1450	12.9									213
		1150	10.3									169
		960	8.6									141

H3 (iN=14-112)

H316 T_{2N} (kN·m)	H316 i_{ex}	H316 P_{1N} (kW)	H317 T_{2N} (kN·m)	H317 i_{ex}	H317 P_{1N} (kW)	H318 T_{2N} (kN·m)	H318 i_{ex}	H318 P_{1N} (kW)	n_{2N} (r/min)	n_1 (r/min)	i_N	Code
			220	13.683	2929				124.3	1740	14	C14
					2441				103.6	1450		
					1936				82.1	1150		
					1616				68.6	960		
190	15.035	2302	220	15.542	2579	265	15.796	3057	108.8	1740	16	C16
		1919			2149			2547	90.6	1450		
		1522			1705			2020	71.9	1150		
		1270			1423			1686	60.0	960		
190	17.078	2027	220	17.702	2264	265	17.942	2691	96.7	1740	18	C18
		1689			1887			2243	80.6	1450		
		1340			1497			1779	63.9	1150		
		1118			1249			1485	53.3	960		
190	19.452	1780	220	19.356	2071	265	20.436	2363	87.0	1740	20	C20
		1483			1726			1969	72.5	1450		
		1176			1369			1562	57.5	1150		
		982			1143			1304	48.0	960		
190	21.269	1628	220	21.586	1857	265	22.345	2161	77.7	1740	22.4	C22
		1356			1547			1801	64.7	1450		
		1076			1227			1428	51.3	1150		
		898			1025			1192	42.9	960		
190	23.719	1459	220	24.557	1632	265	24.919	1938	69.6	1740	25	C25
		1216			1360			1615	58.0	1450		
		965			1079			1281	46.0	1150		
		805			901			1069	38.4	960		
190	26.985	1283	220	27.650	1450	265	28.350	1703	62.1	1740	28	C28
		1069			1208			1419	51.8	1450		
		848			958			1126	41.1	1150		
		708			800			940	34.3	960		
190	30.530	1134	220	31.493	1273	265	31.920	1513	55.2	1740	31.5	C32
		945			1061			1261	46.0	1450		
		749			841			1000	36.5	1150		
		626			702			835	30.5	960		
190	34.774	996	220	34.436	1164	265	36.357	1328	49.0	1740	35.5	C36
		830			970			1107	40.8	1450		
		658			769			878	32.4	1150		
		549			642			733	27.0	960		
190	38.023	910	220	38.403	1044	265	39.754	1215	43.5	1740	40	C40
		759			870			1012	36.3	1450		
		602			690			803	28.8	1150		
		502			576			670	24.0	960		
190	42.403	816	220	43.689	917	265	44.333	1089	38.7	1740	45	C45
		680			765			908	32.2	1450		
		540			606			720	25.6	1150		
		450			506			601	21.3	960		
190	48.240	718	220	49.375	812	265	50.436	957	34.8	1740	50	C50
		598			677			798	29.0	1450		
		474			537			633	23.0	1150		
		396			448			528	19.2	960		
190	54.518	635	220	56.702	707	265	57.000	847	31.1	1740	56	C56
		529			589			706	25.9	1450		
		420			467			560	20.5	1150		
		350			390			467	17.1	960		
190	62.608	553	220	64.893	618	265	65.458	738	27.6	1740	63	C63
		461			515			615	23.0	1450		
		365			408			488	18.3	1150		
		305			341			407	15.2	960		
190	71.653	483	220	71.509	561	265	74.914	645	24.5	1740	71	C71
		403			467			537	20.4	1450		
		319			370			426	16.2	1150		
		267			309			356	13.5	960		
190	78.957	438	220	80.463	498	265	82.552	585	21.8	1740	80	C80
		365			415			487	18.1	1450		
		290			329			387	14.4	1150		
		242			275			323	12.0	960		
190	88.845	390	220	88.480	453	265	92.889	520	19.3	1740	90	C90
		325			378			433	16.1	1450		
		258			299			344	12.8	1150		
		215			250			287	10.7	960		
190	97.697	354	220	98.750	406	265	102.144	473	17.4	1740	100	D10
		295			338			394	14.5	1450		
		234			268			312	11.5	1150		
		195			224			261	9.6	960		
190	109.036	317				265	114.000	424	15.5	1740	112	D11
		265						353	12.9	1450		
		210						280	10.3	1150		
		175						234	8.6	960		

H3 (iN=16-90)

Code	i_N	n_1 (r/min)	n_{2N} (r/min)	H319 T_{2N} (kN·m)	H319 i_{ex}	H319 P_{1N} (kW)	H320 T_{2N} (kN·m)	H320 i_{ex}	H320 P_{1N} (kW)	H321 T_{2N} (kN·m)	H321 i_{ex}	H321 P_{1N} (kW)	H322 T_{2N} (kN·m)	H322 i_{ex}	H322 P_{1N} (kW)
C16	16	1740	108.8	330	15.210	3953*	380	15.368	4505*						
		1450	90.6			3294			3754						
		1150	71.9			2613			2978						
		960	60.0			2181			2486						
C18	18	1740	96.7	330	17.428	3450*	380	17.212	4023*	460	17.090	4904*			
		1450	80.6			2875			3352			4087			
		1150	63.9			2280			2659			3241			
		960	53.3			1903			2219			2706			
C20	20	1740	87.0	330	19.460	3090*	380	19.722	3511*	460	20.000	4191*	520	18.859	5024*
		1450	72.5			2575			2926			3492			4186
		1150	57.5			2042			2320			2770			3320
		960	48.0			1705			1937			2312			2772
C22	22.4	1740	77.7	330	21.809	2757*	380	22.021	3144*	460	22.787	3678*	520	22.070	4293*
		1450	64.7			2297			2620			3065			3577
		1150	51.3			1822			2078			2431			2837
		960	42.9			1521			1735			2029			2368
C25	25	1740	69.6	330	24.655	2439*	380	24.678	2806*	460	24.900	3366*	520	25.145	3768*
		1450	58.0			2032			2338			2805			3140
		1150	46.0			1612			1854			2225			2490
		960	38.4			1345			1548			1857			2079
C28	28	1740	62.1	330	26.667	2255*	380	27.899	2482*	460	28.148	2978*	520	27.478	3448*
		1450	51.8			1879			2068			2481			2873
		1150	41.1			1490			1640			1968			2279
		960	34.3			1244			1369			1643			1902
C32	31.5	1740	55.2	330	30.556	1968*	380	30.175	2294*	460	31.046	2700*	520	31.062	3050*
		1450	46.0			1640			1912			2250			2542
		1150	36.5			1301			1516			1784			2016
		960	30.5			1086			1266			1489			1683
C36	35.5	1740	49.0	330	34.118	1726*	380	34.576	2002*	460	34.604	2422*	520	34.259	2766*
		1450	40.8			1469			1669			2018			2305
		1150	32.4			1165			1323			1601			1828
		960	27.0			972			1105			1336			1526
C40	40	1740	43.5	330	38.235	1573*	380	38.607	1793*	460	39.118	2143*	520	38.186	2481*
		1450	36.3			1310			1494			1785			2068
		1150	28.8			1039			1185			1416			1640
		960	24.0			868			989			1182			1369
C45	45	1740	38.7	330	43.226	1391*	380	43.266	1600*	460	43.144	1943*	520	43.167	2195
		1450	32.2			1159			1334			1619			1829
		1150	25.6			919			1058			1284			1451
		960	21.3			767			883			1072			1211
C50	50	1740	34.8	330	48.276	1245	380	48.913	1415*	460	48.322	1734*	520	47.610	1990
		1450	29.0			1038			1180			1445			1658
		1150	23.0			823			936			1146			1315
		960	19.2			687			781			957			1098
C56	56	1740	31.1	330	55.172	1090	380	54.628	1267	460	54.260	1545*	520	53.324	1777
		1450	25.9			908			1056			1287			1481
		1150	20.5			720			838			1021			1174
		960	17.1			601			699			852			980
C63	63	1740	27.6	330	63.846	942	380	62.432	1109	460	60.025	1396*	520	59.876	1582
		1450	23.0			785			924			1164			1319
		1150	18.3			622			733			923			1046
		960	15.2			520			612			770			873
C71	71	1740	24.5	330	70.833	849	380	72.247	958	460	68.119	1230*	520	66.239	1430
		1450	20.4			707			799			1025			1192
		1150	16.2			561			633			813			945
		960	13.5			468			529			679			789
C80	80	1740	21.8	330	79.091	760	380	80.154	864				520	75.170	1260
		1450	18.1			634			720						1050
		1150	14.4			502			571						833
		960	12.0			419			477						695
C90	90	1740	19.3				380	89.498	774						
		1450	16.1						645						
		1150	12.8						511						
		960	10.7						427						

卧式安装齿轮箱应采用强制润滑

* 敬请垂询

Forced lubricati on required on horizontal gearbox

* On request

H323 T_{2N} (kN·m)	H323 i_{ex}	H323 P_{1N} (kW)	H324 T_{2N} (kN·m)	H324 i_{ex}	H324 P_{1N} (kW)	H325 T_{2N} (kN·m)	H325 i_{ex}	H325 P_{1N} (kW)	H326 T_{2N} (kN·m)	H326 i_{ex}	H326 P_{1N} (kW)	n_{2N} (r/min)	n_1 (r/min)	i_N	Code
												108.8	1740	16	C16
												90.6	1450		
												71.9	1150		
												60.0	960		
640	16.768	*				860	17.104	*	1030	17.140	*	96.7	1740	18	C18
		*						*			*	80.6	1450		
		4596						6055			7236	63.9	1150		
		3837						5054			6041	53.3	960		
640	19.624	*			*	860	19.962	*	1030	20.004	*	87.0	1740	20	C20
		*			*			*			*	72.5	1450		
		3927	725	19.004	4594			5188			6200	57.5	1150		
		3278			3835			4331			5176	48.0	960		
640	22.358	*			*	860	22.787	*	1030	22.835	*	77.7	1740	22.4	C22
		*			*			*			*	64.7	1450		
		3447	725	22.240	3926			4545			5432	51.3	1150		
		2877			3277			3794			4534	42.9	960		
640	24.432	*			*	860	25.852	*	1030	25.907	*	69.6	1740	25	C25
		*			*			*			*	58.0	1450		
		3154	725	25.339	3445			4006			4788	46.0	1150		
		2633			2876			3344			3997	38.4	960		
640	27.619	*			*	860	28.194	*	1030	28.253	*	62.1	1740	28	C28
		*			*			*			*	51.8	1450		
		2790	725	27.689	3153			3673			4390	41.1	1150		
		2329			2632			3066			3665	34.3	960		
640	30.462	*			*	860	31.688	*	1030	31.755	*	55.2	1740	31.5	C32
		*			*			*			*	46.0	1450		
		2530	725	31.301	2789			3268			3906	36.5	1150		
		2112			2328			2728			3261	30.5	960		
640	33.767	*			*	860	36.845	*	1030	36.922	*	49.0	1740	35.5	C36
		*			*			*			*	40.8	1450		
		2282	725	34.523	2529			2811			3359	32.4	1150		
		1905			2111			2346			2804	27.0	960		
640	38.172	*			*	860	40.181	*	1030	40.266	*	43.5	1740	40	C40
		*			*			*			*	36.3	1450		
		2019	725	38.270	2281			2577			3080	28.8	1150		
		1685			1904			2152			2571	24.0	960		
640	42.101	*			*	860	45.162	*	1030	45.257	*	38.7	1740	45	C45
		*			*			*			*	32.2	1450		
		1831	725	43.262	2018			2293			2741	25.6	1150		
		1528			1685			1914			2288	21.3	960		
640	47.154	*			*	860	49.547	*	1030	49.651	*	34.8	1740	50	C50
		2061			2307			*			*	29.0	1450		
		1634	725	47.715	1830			2090			2498	23.0	1150		
		1364			1527			1745			2085	19.2	960		
640	52.948	*			*	860	55.308	*	1030	55.424	*	31.1	1740	56	C56
		1835			2060			*			*	25.9	1450		
		1456	725	53.441	1634			1872			2238	20.5	1150		
		1215			1364			1563			1868	17.1	960		
640	58.574	*			*	860	61.924	*	1030	62.054	*	27.6	1740	63	C63
		1659			1834			2109			*	23.0	1450		
		1316	725	60.008	1455			1672			1999	18.3	1150		
		1098			1214			1396			1669	15.2	960		
640	66.472	*			*	860	68.221	*	1030	68.365	*	24.5	1740	71	C71
		1462			1658			1914			2288	20.4	1450		
		1159	725	66.384	1315			1518			1814	16.2	1150		
		968			1098			1267			1515	13.5	960		
					*			*			*	21.8	1740	80	C80
					1461			1696			2027	18.1	1450		
			725	75.335	1159	860	77.002	1345	1030	77.164	1607	14.4	1150		
					967			1123			1342	12.0	960		
												19.3	1740	90	C90
												16.1	1450		
												12.8	1150		
												10.7	960		

H4 (iN=71-400)

Code	i_N	n_1 (r/min)	n_{2N} (r/min)	H407 T_{2N} (kN·m)	H407 i_{ex}	H407 P_{1N} (kW)	H408 T_{2N} (kN·m)	H408 i_{ex}	H408 P_{1N} (kW)	H409 T_{2N} (kN·m)	H409 i_{ex}	H409 P_{1N} (kW)
C71	71	1740	24.5	21.7	71.2	56	28.5	70.3	71	35.7	65.9	91
		1450	20.4			46.5			59			76
		1150	16.2			36.9			46.8			60
		960	13.5			30.8			39.1			50
C80	80	1740	21.8	21.7	81.1	48.7	28.5	80.0	62	35.7	74.9	81
		1450	18.1			40.6			52			67
		1150	14.4			32.2			41.2			53
		960	12.0			26.9			34.4			44.5
C90	90	1740	19.3	21.7	89.9	43.3	28.5	88.7	56	35.7	86.8	72
		1450	16.1			36.1			47.0			60
		1150	12.8			28.6			37.3			47.4
		960	10.7			23.9			31.1			39.5
D10	100	1740	17.4	21.7	103.1	39.6	28.5	101.8	50	35.7	94.6	65
		1450	14.5			33.0			42.0			54
		1150	11.5			26.2			33.3			42.8
		960	9.6			21.8			27.8			35.8
D11	112	1740	15.5	21.7	116.0	34.8	28.5	114.5	44.6	35.7	106.4	58
		1450	12.9			29.0			37.2			48.0
		1150	10.3			23.0			29.5			38.1
		960	8.57			19.2			24.6			31.8
D13	125	1740	13.9	21.7	126.6	31.2	28.5	125.0	40.9	35.7	117.1	52
		1450	11.6			26.0			34.1			43.0
		1150	9.20			20.6			27.0			34.1
		960	7.68			17.2			22.6			28.5
D14	140	1740	12.4	21.7	144.1	27.6	28.5	142.2	36.2	35.7	133.1	45.6
		1450	10.4			23.0			30.2			38.0
		1150	8.21			18.2			24.0			30.1
		960	6.86			15.2			20.0			25.2
D16	160	1740	10.9	21.7	159.8	24.0	28.5	157.7	32.4	35.7	154.3	40.8
		1450	9.06			20.0			27.0			34.0
		1150	7.19			15.9			21.4			27.0
		960	6.00			13.2			17.9			22.5
D18	180	1740	9.67	21.7	183.3	21.6	28.5	180.9	28.8	35.7	168.2	36.0
		1450	8.06			18.0			24.0			30.0
		1150	6.39			14.3			19.0			23.8
		960	5.33			11.9			15.9			19.9
D20	200	1740	8.70	21.7	206.2	19.2	28.5	203.5	25.7	35.7	189.2	32.4
		1450	7.25			16.0			21.4			27.0
		1150	5.75			12.7			17.0			21.4
		960	4.80			10.6			14.2			17.9
D22	224	1740	7.77	21.7	230.5	18.0	28.5	227.4	23.2	35.7	207.4	28.8
		1450	6.47			15.0			19.3			24.0
		1150	5.13			11.9			15.3			19.0
		960	4.29			9.9			12.8			15.9
D25	250	1740	6.96	21.7	256.6	15.6	28.5	253.3	20.9	35.7	239.6	25.2
		1450	5.80			13.0			17.4			21.0
		1150	4.60			10.3			13.8			16.7
		960	3.84			8.6			11.5			13.9
D28	280	1740	6.21	21.7	281.2	14.4	28.5	277.5	18.0	35.7	255.5	22.8
		1450	5.18			12.0			15.0			19.0
		1150	4.11			9.5			11.9			15.1
		960	3.43			7.9			9.9			12.6
D32	315	1740	5.52	21.7	305.8	12.0	28.5	301.8	16.8	35.7	295	20.4
		1450	4.60			10.0			14.0			17.0
		1150	3.65			7.9			11.1			13.5
		960	3.05			6.6			9.3			11.3
D36	355	1740	4.90							35.7	335.4	18.0
		1450	4.08									15.0
		1150	3.24									11.9
		960	2.70									9.9
D40	400	1740	4.35							35.7	372.7	16.0
		1450	3.63									13.3
		1150	2.88									10.6
		960	2.40									8.8

H4 (iN=71-400)

H410 T_{2N} (kN·m)	H410 i_{ex}	H410 P_{1N} (kW)	H411 T_{2N} (kN·m)	H411 i_{ex}	H411 P_{1N} (kW)	H412 T_{2N} (kN·m)	H412 i_{ex}	H412 P_{1N} (kW)	n_{2N} (r/min)	n_1 (r/min)	i_N	Code
47	65.0	121	62	70.7	157	78	70.8	201	24.5	1740	71	C71
		101			131			167	20.4	1450		
		80			104			133	16.2	1150		
		67			87			111	13.5	960		
47	73.9	107	62	77.4	139	78	77.5	176	21.8	1740	80	C80
		89			116			147	18.1	1450		
		71			92			117	14.4	1150		
		59			77			97	12.0	960		
47	85.7	95	62	91.5	123	78	91.6	156	19.3	1740	90	C90
		79			103			130	16.1	1450		
		63			82			103	12.8	1150		
		52			68			86	10.7	960		
47	93.5	86	62	102.5	112	78	102.6	140	17.4	1740	100	D10
		71			93			117	14.5	1450		
		57			74			93	11.5	1150		
		47.2			62			77	9.6	960		
47	105.1	76	62	109.4	100	78	109.6	126	15.5	1740	112	D11
		64			83			105	12.9	1450		
		51			66			84	10.3	1150		
		42.2			55			70	8.57	960		
47	115.6	69	62	125.2	89	78	125.4	114	13.9	1740	125	D13
		57			74			95	11.6	1450		
		45.3			59			75	9.20	1150		
		37.8			49.0			63	7.68	960		
47	131.4	61	62	141.5	80	78	141.7	101	12.4	1740	140	D14
		51			67			84	10.4	1450		
		40.4			53			67	8.21	1150		
		33.7			44.4			56	6.86	960		
47	152.4	54	62	167.3	70	78	167.5	88	10.9	1740	160	D16
		44.6			58			73	9.06	1450		
		35.4			46.0			58	7.19	1150		
		29.5			38.4			48.3	6.00	960		
47	166.1	47.6	62	187.4	61	78	187.7	78	9.67	1740	180	D18
		39.6			51			65	8.06	1450		
		31.4			40.4			52	6.39	1150		
		26.2			33.8			43.0	5.33	960		
47	186.8	42.8	62	200.1	55	78	200.4	71	8.70	1740	200	D20
		35.7			46.0			59	7.25	1450		
		28.3			36.5			46.8	5.75	1150		
		23.6			30.5			39.1	4.80	960		
47	204.8	38.2	62	229.0	50	78	229.3	62	7.77	1740	224	D22
		31.9			42.0			52	6.47	1450		
		25.3			33.3			41.2	5.13	1150		
		21.1			27.8			34.4	4.29	960		
47	236.6	34.3	62	254.5	44.4	78	254.9	56	6.96	1740	250	D25
		28.5			37.0			47.0	5.80	1450		
		22.6			29.3			37.3	4.60	1150		
		18.9			24.5			31.1	3.84	960		
47	252.3	30.6	62	288.7	39.6	78	289.1	52	6.21	1740	280	D28
		25.5			33.0			43.0	5.18	1450		
		20.2			26.2			34.1	4.11	1150		
		16.9			21.8			28.5	3.43	960		
47	291.3	27.2	62	323.5	34.8	78	324.0	45.6	5.52	1740	315	D32
		22.7			29.0			38.0	4.60	1450		
		18			23.0			30.1	3.65	1150		
		15			19.2			25.2	3.05	960		
47	331.2	24.1	62	369.3	31.2	78	369.8	39.6	4.90	1740	355	D36
		20.1			26.0			33.0	4.08	1450		
		15.9			20.6			26.2	3.24	1150		
		13.3			17.2			21.8	2.70	960		
47	368	21.4	62	393.6	27.7	78	394.1	36.0	4.35	1740	400	D40
		17.8			23.1			30.0	3.63	1450		
		14.1			18.3			23.8	2.88	1150		
		11.8			15.3			19.9	2.40	960		

H4 (iN=63-450)

Code	i_N	n_1 (r/min)	n_{2N} (r/min)	H413 T_{2N} (kN·m)	H413 i_{ex}	H413 P_{1N} (kW)	H414 T_{2N} (kN·m)	H414 i_{ex}	H414 P_{1N} (kW)	H415 T_{2N} (kN·m)	H415 i_{ex}	H415 P_{1N} (kW)
C63	63	1740	27.6									
		1450	23.0									
		1150	18.3									
		960	15.2									
C71	71	1740	24.5	91	67.606	245	125	67.656	337	153	67.549	413
		1450	20.4			204			281			344
		1150	16.2			162			222			273
		960	13.5			135			186			228
C80	80	1740	21.8	91	75.714	219	125	75.770	301	153	75.543	369
		1450	18.1			182			250			308
		1150	14.4			145			199			244
		960	12.0			121			166			204
C90	90	1740	19.3	91	89.261	186	125	89.327	255	153	84.050	332
		1450	16.1			155			212			276
		1150	12.8			123			169			219
		960	10.7			102			141			183
D10	100	1740	17.4	91	96.850	171	125	96.922	235	153	94.676	294
		1450	14.5			143			196			245
		1150	11.5			113			155			195
		960	9.6			94			130			162
D11	112	1740	15.5	91	113.091	147	125	113.175	201	153	109.118	255
		1450	12.9			122			168			213
		1150	10.3			97			133			169
		960	8.6			81			111			141
D13	125	1740	13.9	91	125.308	132	125	125.402	182	153	120.406	232
		1450	11.6			110			151			193
		1150	9.2			87			120			153
		960	7.7			73			100			128
D14	140	1740	12.4	91	131.237	126	125	131.335	173	153	141.544	197
		1450	10.4			105			145			164
		1150	8.2			83			115			130
		960	6.9			70			96			109
D16	160	1740	10.9	91	154.719	107	125	154.834	147	153	157.483	177
		1450	9.1			89			123			148
		1150	7.2			71			97			117
		960	6.0			59			81			98
D18	180	1740	9.7	91	167.873	99	125	167.998	136	153	177.392	157
		1450	8.1			82			113			131
		1150	6.4			65			90			104
		960	5.3			54			75			87
D20	200	1740	8.7	91	196.024	85	125	196.170	116	153	204.452	136
		1450	7.3			70			97			114
		1150	5.8			56			77			90
		960	4.8			47			64			75
D22	224	1740	7.8	91	217.201	76	125	217.363	105	153	225.602	124
		1450	6.5			64			87			103
		1150	5.1			50			69			82
		960	4.3			42			58			68
D25	250	1740	7.0	91	230.350	72	125	230.522	99	153	249.886	112
		1450	5.8			60			82			93
		1150	4.6			48			65			74
		960	3.8			40			55			62
D28	280	1740	6.2	91	261.832	63	125	262.026	87	153	278.055	100
		1450	5.2			53			72			84
		1150	4.1			42			57			66
		960	3.4			35			48			55
D32	315	1740	5.5	91	325.306	51	125	325.548	70	153	315.567	88
		1450	4.6			42			58			74
		1150	3.7			34			46			58
		960	3.0			28			39			49
D36	355	1740	4.9	91	380.846	44	125	381.129	60	153	350.489	80
		1450	4.1			36			50			66
		1150	3.2			29			39			53
		960	2.7			24			33			44
D40	400	1740	4.4	91	409.409	40	125	409.714	56	153	398.143	70
		1450	3.6			34			46			58
		1150	2.9			27			37			46
		960	2.4			22			31			39
D45	450	1740	3.9	91	460.189	36	125	460.531	49	153	457.010	61
		1450	3.2			30			41			51
		1150	2.6			24			33			40
		960	2.1			20			27			34

H4 (iN=63-450)

H416 T_{2N} (kN·m)	H416 i_{ex}	H416 P_{1N} (kW)	H417 T_{2N} (kN·m)	H417 i_{ex}	H417 P_{1N} (kW)	H418 T_{2N} (kN·m)	H418 i_{ex}	H418 P_{1N} (kW)	n_{2N} (r/min)	n_1 (r/min)	i_N	Code
			220	61.131	656				27.6	1740	63	C63
					546				23.0	1450		
					433				18.3	1150		
					362				15.2	960		
190	67.499	513	220	68.365	586	265	70.571	684	24.5	1740	71	C71
		427			489			570	20.4	1450		
		339			388			452	16.2	1150		
		283			323			377	13.5	960		
190	75.487	459	220	76.064	527	265	78.923	612	21.8	1740	80	C80
		382			439			510	18.1	1450		
		303			348			404	14.4	1150		
		253			291			338	12.0	960		
190	83.988	412	220	85.680	468	265	87.811	550	19.3	1740	90	C90
		343			390			458	16.1	1450		
		272			309			363	12.8	1150		
		227			258			303	10.7	960		
190	94.605	366	220	98.750	406	265	98.912	488	17.4	1740	100	D10
		305			338			407	14.5	1450		
		242			268			323	11.5	1150		
		202			224			269	9.6	960		
190	109.036	317	220	108.966	368	265	114.000	424	15.5	1740	112	D11
		265			307			353	12.9	1450		
		210			243			280	10.3	1150		
		175			203			234	8.6	960		
190	120.316	288	220	128.095	313	265	125.793	384	13.9	1740	125	D13
		240			261			320	11.6	1450		
		190			207			254	9.2	1150		
		159			173			212	7.7	960		
190	141.438	245	220	142.520	281	265	147.877	327	12.4	1740	140	D14
		204			234			272	10.4	1450		
		162			186			216	8.2	1150		
		135			155			180	6.9	960		
190	157.366	220	220	160.538	250	265	164.530	293	10.9	1740	160	D16
		183			208			245	9.1	1450		
		145			165			194	7.2	1150		
		121			138			162	6.0	960		
190	177.260	195	220	185.026	217	265	185.329	261	9.7	1740	180	D18
		163			181			217	8.1	1450		
		129			143			172	6.4	1150		
		108			120			144	5.3	960		
190	204.300	169	220	204.167	196	265	213.600	226	8.7	1740	200	D20
		141			164			188	7.3	1450		
		112			130			149	5.8	1150		
		93			108			125	4.8	960		
190	225.434	154	220	226.143	177	265	235.697	205	7.8	1740	224	D22
		128			148			171	6.5	1450		
		101			117			135	5.1	1150		
		85			98			113	4.3	960		
190	249.700	139	220	251.636	159	265	261.067	185	7.0	1740	250	D25
		116			133			154	5.8	1450		
		92			105			122	4.6	1150		
		76			88			102	3.8	960		
190	277.848	125	220	285.584	140	265	290.496	166	6.2	1740	280	D28
		104			117			139	5.2	1450		
		82			93			110	4.1	1150		
		69			77			92	3.4	960		
190	315.332	110	220	317.188	126	265	329.687	146	5.5	1740	315	D32
		91			105			122	4.6	1450		
		73			84			97	3.7	1150		
		61			70			81	3.0	960		
190	350.228	99	220	360.314	111	265	366.171	132	4.9	1740	355	D36
		82			93			110	4.1	1450		
		65			74			87	3.2	1150		
		55			61			73	2.7	960		
190	397.847	87	220	413.588	97	265	415.958	116	4.4	1740	400	D40
		73			81			97	3.6	1450		
		58			64			77	2.9	1150		
		48			53			64	2.4	960		
190	456.670	76				265	477.459	101	3.9	1740	450	D45
		63						84	3.2	1450		
		50						67	2.6	1150		
		42						56	2.1	960		

H4 (iN=63-450)

Code	i_N	n_1 (r/min)	n_{2N} (r/min)	H419			H420			H421			H422		
				T_{2N} (kN・m)	i_{ex}	P_{1N} (kW)	T_{2N} (kN・m)	i_{ex}	P_{1N} (kW)	T_{2N} (kN・m)	i_{ex}	P_{1N} (kW)	T_{2N} (kN・m)	i_{ex}	P_{1N} (kW)
C63	63	1740	27.6												
		1450	23.0												
		1150	18.3												
		960	15.2												
C71	71	1740	24.5	330	68.391	879	380	68.635	1009	460	67.651	1239	520	65.724	1442
		1450	20.4			733			841			1032			1201
		1150	16.2			581			667			819			953
		960	13.5			485			557			684			795
C80	80	1740	21.8	330	78.997	761	380	77.390	895	460	77.054	1088	520	74.653	1269
		1450	18.1			634			746			906			1058
		1150	14.4			503			591			719			839
		960	12.0			420			494			600			700
C90	90	1740	19.3	330	90.115	667	380	89.391	775	460	84.253	995	520	85.029	1114
		1450	16.1			556			645			829			929
		1150	12.8			441			512			657			736
		960	10.7			368			427			549			615
D10	100	1740	17.4	330	96.552	623	380	101.972	679	460	93.959	892	520	92.974	1019
		1450	14.5			519			566			743			849
		1150	11.5			412			449			590			673
		960	9.6			344			375			492			562
D11	112	1740	15.5	330	104.338	576	380	109.256	634	460	106.894	784	520	103.685	914
		1450	12.9			480			528			653			761
		1150	10.3			381			419			518			604
		960	8.6			318			350			433			504
D13	125	1740	13.9	330	126.083	477	380	118.067	586	460	120.939	693	520	117.958	803
		1450	11.6			397			489			578			669
		1150	9.2			315			388			458			531
		960	7.7			263			324			382			443
D14	140	1740	12.4	330	145.636	413	380	142.673	485	460	137.749	608	520	133.457	710
		1450	10.4			344			404			507			592
		1150	8.2			273			321			402			469
		960	6.9			228			268			336			392
D16	160	1740	10.9	330	166.133	362	380	164.799	420	460	150.620	556	520	152.007	623
		1450	9.1			302			350			464			519
		1150	7.2			239			278			368			412
		960	6.0			200			232			307			344
D18	180	1740	9.7	330	178.000	338	380	187.993	368	460	167.970	499	520	166.210	570
		1450	8.1			281			307			416			475
		1150	6.4			223			243			330			377
		960	5.3			186			203			275			314
D20	200	1740	8.7	330	192.355	313	380	201.421	344	460	191.094	439	520	185.357	511
		1450	7.3			260			286			365			426
		1150	5.8			207			227			290			338
		960	4.8			172			190			242			282
D22	224	1740	7.8	330	222.500	270	380	217.665	318	460	215.962	388	520	210.874	449
		1450	6.5			225			265			323			374
		1150	5.1			179			210			256			297
		960	4.3			149			175			214			248
D25	250	1740	7.0	330	248.586	242	380	251.776	275	460	248.008	338	520	238.316	398
		1450	5.8			202			229			282			331
		1150	4.6			160			182			223			263
		960	3.8			133			152			186			219
D28	280	1740	6.2	330	280.185	215	380	281.295	246	460	283.836	295	520	273.679	346
		1450	5.2			179			205			246			288
		1150	4.1			142			163			195			229
		960	3.4			118			136			163			191
D32	315	1740	5.5	330	309.720	194	380	317.052	218	460	312.773	268	520	313.215	302
		1450	4.6			162			182			223			252
		1150	3.7			128			144			177			200
		960	3.0			107			120			148			167
D36	355	1740	4.9	330	348.261	173	380	350.473	198	460	351.938	238	520	345.147	275
		1450	4.1			144			165			198			229
		1150	3.2			114			131			157			181
		960	2.7			95			109			131			151
D40	400	1740	4.4	330	385.667	156	380	394.085	176	460	387.004	217	520	388.367	244
		1450	3.6			130			146			180			203
		1150	2.9			103			116			143			161
		960	2.4			86			97			119			135
D45	450	1740	3.9				380	436.412	159				520	427.062	222
		1450	3.2						132						185
		1150	2.6						105						147
		960	2.1						88						122

H4 (iN=63-450)

H423			H424			H425			H426			n_{2N} (r/min)	n_1 (r/min)	i_N	Code
T_{2N} (kN・m)	i_{ex}	P_{1N} (kW)	T_{2N} (kN・m)	i_{ex}	P_{1N} (kW)	T_{2N} (kN・m)	i_{ex}	P_{1N} (kW)	T_{2N} (kN・m)	i_{ex}	P_{1N} (kW)				
640	58.120	2006				860	60.164	2604	1030	60.291	3113	27.6	1740	63	C63
		1672						2170			2594	23.0	1450		
		1326						1721			2057	18.3	1150		
		1107						1437			1717	15.2	960		
640	66.015	1766	725	65.869	2005	860	68.603	2284	1030	68.748	2730	24.5	1740	71	C71
		1472			1671			1903			2275	20.4	1450		
		1167			1325			1510			1804	16.2	1150		
		975			1106			1260			1506	13.5	960		
640	75.191	1551	725	74.817	1766	860	78.449	1997	1030	78.614	2387	21.8	1740	80	C80
		1292			1471			1664			1989	18.1	1450		
		1025			1167			1320			1578	14.4	1150		
		856			974			1102			1317	12.0	960		
640	82.216	1418	725	85.216	1550	860	85.978	1822	1030	86.159	2178	19.3	1740	90	C90
		1182			1292			1519			1815	16.1	1450		
		937			1024			1204			1440	12.8	1150		
		783			855			1005			1202	10.7	960		
640	91.688	1272	725	93.179	1418	860	97.636	1605	1030	97.842	1918	17.4	1740	100	D10
		1060			1181			1337			1598	14.5	1450		
		841			937			1061			1268	11.5	1150		
		702			782			885			1058	9.6	960		
640	104.309	1118	725	103.913	1271	860	106.835	1467	1030	107.060	1753	15.5	1740	112	D11
		932			1059			1222			1461	12.9	1450		
		739			840			969			1159	10.3	1150		
		617			701			809			967	8.6	960		
640	118.015	988	725	118.217	1117	860	122.050	1284	1030	122.307	1534	13.9	1740	125	D13
		823			931			1070			1279	11.6	1450		
		653			739			849			1014	9.2	1150		
		545			616			708			847	7.7	960		
640	134.419	867	725	133.750	988	860	139.566	1123	1030	139.860	1342	12.4	1740	140	D14
		723			823			936			1118	10.4	1450		
		573			653			742			887	8.2	1150		
		479			545			619			740	6.9	960		
640	146.978	793	725	152.341	867	860	152.961	1024	1030	153.283	1224	10.9	1740	160	D16
		661			723			854			1020	9.1	1450		
		524			573			677			809	7.2	1150		
		438			478			565			675	6.0	960		
640	163.910	711	725	166.575	793	860	173.702	902	1030	174.067	1078	9.7	1740	180	D18
		593			661			752			898	8.1	1450		
		470			524			596			713	6.4	1150		
		393			438			498			595	5.3	960		
640	186.474	625	725	185.764	711	860	190.067	824	1030	190.467	985	8.7	1740	200	D20
		521			593			687			821	7.3	1450		
		413			470			545			651	5.8	1150		
		345			392			455			544	4.8	960		
640	210.741	553	725	211.337	625	860	218.848	716	1030	219.309	856	7.8	1740	224	D22
		461			521			597			713	6.5	1450		
		366			413			473			566	5.1	1150		
		305			345			395			472	4.3	960		
640	242.012	482	725	238.840	553	860	243.164	644	1030	243.676	770	7.0	1740	250	D25
		402			461			537			642	5.8	1450		
		318			366			426			509	4.6	1150		
		266			305			356			425	3.8	960		
640	276.974	421	725	274.280	482	860	281.393	557	1030	281.985	666	6.2	1740	280	D28
		351			401			464			555	5.2	1450		
		278			318			368			440	4.1	1150		
		232			266			307			367	3.4	960		
640	305.211	382	725	313.904	421	860	312.188	502	1030	312.845	600	5.5	1740	315	D32
		318			351			418			500	4.6	1450		
		253			278			332			396	3.7	1150		
		211			232			277			331	3.0	960		
640	343.430	340	725	345.906	382	860	348.582	450	1030	349.315	537	4.9	1740	355	D36
		283			318			375			448	4.1	1450		
		224			252			297			355	3.2	1150		
		187			211			248			296	2.7	960		
640	377.648	309	725	389.220	339							4.4	1740	400	D40
		257			283							3.6	1450		
		204			224							2.9	1150		
		170			187							2.4	960		
			725	428.001	309							3.9	1740	450	D45
					257							3.2	1450		
					204							2.6	1150		
					170							2.1	960		

B2 (iN=6.3-14)

Code	i_N	n_1 (r/min)	n_{2N} (r/min)	B204			B205			B206			B207		
				T_{2N} (kN・m)	i_{ex}	P_{1N} (kW)	T_{2N} (kN・m)	i_{ex}	P_{1N} (kW)	T_{2N} (kN・m)	i_{ex}	P_{1N} (kW)	T_{2N} (kN・m)	i_{ex}	P_{1N} (kW)
B50	5	1740	348	6.2	4.94	238	9.4	4.97	345				19.0	4.93	702
		1450	290			199			287						585
		1150	230			158			228						464
		960	192			131			190						387
B56	5.6	1740	311	6.2	5.57	203	9.4	5.75	298				19.0	5.56	623
		1450	259			169			248						519
		1150	205			134			197						412
		960	171			112			164						344
B63	6.3	1740	276	6.2	6.33	178	9.4	6.22	275	12.0	6.44	340	19.0	6.33	547
		1450	230			149			229			283			456
		1150	183			118			182			224			361
		960	152			99			152			187			302
B71	7.1	1740	245	6.2	7.13	157	9.4	6.96	240	12.0	7.14	307	19.0	7.14	486
		1450	204			131			200			256			405
		1150	162			104			159			203			321
		960	135			87			132			169			268
B80	8	1740	218	6.2	8.26	142	9.4	8.06	215	12.0	8.27	274	19.0	8.27	434
		1450	181			118			179			228			362
		1150	144			94			142			181			287
		960	120			78			119			151			240
B90	9	1740	193	6.2	8.93	125	9.4	8.71	191	12.0	8.94	242	19.0	8.94	385
		1450	161			104			159			202			321
		1150	128			82			126			160			255
		960	107			69			105			134			213
C10	10	1740	174	6.2	10.1	113	9.4	9.88	170	12.0	10.1	218	19.0	10.1	346
		1450	145			94			142			182			288
		1150	115			75			113			144			228
		960	96.0			62			94			120			191
C11	11.2	1740	155	6.2	11.1	100	9.4	10.9	152	12.0	11.1	194	19.0	11.1	308
		1450	129			83			127			162			257
		1150	103			66			101			128			204
		960	85.7			55			84			107			170
C13	12.5	1740	139	6.2	12.9	89	9.4	12.5	137	12.0	12.9	174	19.0	12.9	276
		1450	116			74			114			145			230
		1150	92.0			59			90			115			183
		960	76.8			49.2			75			96			152
C14	14	1740	124	6.2	13.9	80	9.4	13.6	122	12.0	13.9	156	19.0	13.9	247
		1450	104			66			102			130			206
		1150	82.1			53			81			103			163
		960	68.6			44.0			67			86			136

B2 (iN=6.3-14)

B208			B209			B210			B211			B212			n_{2N} (r/min)	n_1 (r/min)	i_N	Code
T_{2N} (kN・m)	i_{ex}	P_{1N} (kW)	T_{2N} (kN・m)	i_{ex}	P_{1N} (kW)	T_{2N} (kN・m)	i_{ex}	P_{1N} (kW)	T_{2N} (kN・m)	i_{ex}	P_{1N} (kW)	T_{2N} (kN・m)	i_{ex}	P_{1N} (kW)				
			29.9	4.93	1105				54	4.93	2007*				350	1740	5	B50
					921						1663				290	1450		
					730						1319				230	1150		
					610						1101				192	960		
			29.9	5.56	980				54	5.56	1780*				313	1740	5.6	B56
					817						1475				259	1450		
					648						1170				205	1150		
					541						976				171	960		
23.8	6.25	694	29.9	6.25	872	38.0	6.44	1075	54	6.17	1604*	63	6.18	1868*	276	1740	6.3	B63
		578			726			896			1329			1548	230	1450		
		459			576			711			1054			1228	183	1150		
		383			481			593			880			1025	152	960		
23.8	7.05	610	29.9	7.05	766	38.0	6.96	973	54	6.96	1342	63	6.97	1560	245	1740	7.1	B71
		508			638			811			1118			1300	204	1450		
		403			506			643			887			1031	162	1150		
		336			422			537			740			861	135	960		
23.8	8.16	542	29.9	8.16	682	38.0	8.06	868	54	8.06	1234	63	8.07	1441	218	1740	8	B80
		452			568			723			1028			1201	181	1450		
		358			450			573			815			953	144	1150		
		299			376			479			681			795	120	960		
23.8	8.82	482	29.9	8.82	606	38.0	8.71	770	54	8.71	1096	67	8.73	1322	193	1740	9	B90
		402			505			642			913			1102	161	1450		
		319			401			509			724			874	128	1150		
		266			334			425			604			730	107	960		
23.8	10.0	433	29.9	10.0	544	38.0	9.88	691	54	9.88	984	67	9.89	1207	174	1740	10	C10
		361			453			576			820			1006	145	1450		
		286			359			457			650			798	115	1150		
		239			300			381			543			666	96.0	960		
23.8	11.0	386	29.9	11.0	486	38.0	10.9	618	54	10.9	878	67	10.9	1079	155	1740	11.2	C11
		322			405			515			732			899	129	1450		
		255			321			408			581			713	103	1150		
		213			268			341			485			595	85.7	960		
23.8	12.7	347	29.9	12.7	435	38.0	12.5	553	54	12.5	787	67	12.6	966	139	1740	12.5	C13
		289			363			461			656			805	116	1450		
		229			288			366			520			638	92.0	1150		
		191			240			305			434			533	76.8	960		
23.8	13.8	308	29.9	13.8	389	38.0	13.6	493	54	13.6	703	67	13.6	860	124	1740	14	C14
		257			324			411			586			717	104	1450		
		204			257			326			464			569	82.1	1150		
		170			215			272			388			475	68.6	960		

卧式安装齿轮箱应采用强制润滑
* 敬请垂询

Forced lubricati on required on horizontal gearbox
* On request

B2 (iN=6.3-14)

Code	i_N	n_1 (r/min)	n_{2N} (r/min)	B213			B214			B215		
				T_{2N} (kN·m)	i_{ex}	P_{1N} (kW)	T_{2N} (kN·m)	i_{ex}	P_{1N} (kW)	T_{2N} (kN·m)	i_{ex}	P_{1N} (kW)
B63	6.3	1740	276.2	76	6.172	2244*	96	6.176	2832*	130	6.176	3835*
		1450	230.2			1870			2360			3196*
		1150	182.5			1483			1872			2535*
		960	152.4			1238			1562			2116
B71	7.1	1740	245.1	76	6.957	1990*	96	6.963	2512*	132	6.963	3454*
		1450	204.2			1659			2093			2879*
		1150	162.0			1315			1660			2283*
		960	135.2			1098			1386			1906
B80	8	1740	217.5	82	8.056	1855*	104	8.062	2350*	132	8.062	2983*
		1450	181.3			1545			1959			2486
		1150	143.8			1226			1553			1972
		960	120.0			1023			1297			1646
B90	9	1740	193.3	82	8.713	1715*	104	8.720	2173*	132	8.720	2758*
		1450	161.1			1429			1811			2298
		1150	127.8			1133			1436			1823
		960	106.7			946			1199			1522
C10	10	1740	174.0	82	10.204	1464*	109	10.212	1945*	132	10.212	2355*
		1450	145.0			1220			1621			1963
		1150	115.0			968			1285			1557
		960	96.0			808			1073			1299
C11	11.2	1740	155.4	82	10.863	1375*	111	10.871	1860*	132	10.871	2212*
		1450	129.5			1146			1550			1844
		1150	102.7			909			1230			1462
		960	85.7			759			1026			1221
C13	12.5	1740	139.2	82	12.534	1192*	111	12.543	1612*	132	12.543	1917*
		1450	116.0			993			1344			1598
		1150	92.0			788			1066			1267
		960	76.8			658			890			1058
C14	14	1740	124.3	82	13.578	1100*	111	13.588	1488*	132	13.588	1770*
		1450	103.6			917			1240			1475
		1150	82.1			727			984			1170
		960	68.6			607			821			977

卧式安装齿轮箱应采用强制润滑
* 敬请垂询

Forced lubricati on required on horizontal gearbox
* On request

B2 (iN=6.3-14)

B216			B217			B218			n_{2N} (r/min)	n_1 (r/min)	i_N	Code
T_{2N} (kN·m)	i_{ex}	P_{1N} (kW)	T_{2N} (kN·m)	i_{ex}	P_{1N} (kW)	T_{2N} (kN·m)	i_{ex}	P_{1N} (kW)				
160	6.172	4723*	215	6.184					276.2	1740	6.3	B63
		3936*			5278*				230.2	1450		
		3122*			4189*				182.5	1150		
		2606			3495*				152.4	960		
160	6.957	4190*	215	7.161		253	7.139		245.1	1740	7.1	B71
		3492*			4559*				204.2	1450		
		2769*			3616*			4267*	162.0	1150		
		2312			3018			3562*	135.2	960		
163	8.056	3687*	215	7.745	5058*	253	8.267		217.5	1740	8	B80
		3072*			4215*			4647*	181.3	1450		
		2437*			3343*			3685*	143.8	1150		
		2034			2790			3077	120.0	960		
163	8.713	3408*	215	9.070	4319*	253	8.941	5156*	193.3	1740	9	B90
		2840			3599*			4296*	161.1	1450		
		2253			2854*			3407*	127.8	1150		
		1881			2383			2844	106.7	960		
163	10.204	2910*	215	9.948	3938*	253	10.471	4402*	174.0	1740	10	C10
		2425			3281*			3669*	145.0	1450		
		1924			2602*			2910*	115.0	1150		
		1606			2173			2429	96.0	960		
163	10.863	2734*	215	11.141	3516*	253	11.484	4014*	155.4	1740	11.2	C11
		2278			2930*			3345*	129.5	1450		
		1807			2324*			2653*	102.7	1150		
		1508			1940			2215	85.7	960		
163	12.534	2369*	215	12.069	3246*	253	12.862	3584*	139.2	1740	12.5	C13
		1975			2705*			2987*	116.0	1450		
		1566			2145*			2369*	92.0	1150		
		1307			1791			1977	76.8	960		
163	13.578	2187*	215	13.606	2879*	253	13.933	3308*	124.3	1740	14	C14
		1823			2399			2757*	103.6	1450		
		1446			1903			2187*	82.1	1150		
		1207			1589			1825	68.6	960		

卧式安装齿轮箱应采用强制润滑
* 敬请垂询

Forced lubricati on required on horizontal gearbox
* On request

B3 (iN=16-90)

Code	i_N	n_1 (r/min)	n_{2N} (r/min)	B304			B305			B306			B307		
				T_{2N} (kN·m)	i_{ex}	P_{1N} (kW)	T_{2N} (kN·m)	i_{ex}	P_{1N} (kW)	T_{2N} (kN·m)	i_{ex}	P_{1N} (kW)	T_{2N} (kN·m)	i_{ex}	P_{1N} (kW)
C16	16	1740	109.0	6.7	15.6	74	10.5	14.9	120	12.0	15.3	137	20.0	15.5	226
		1450	90.6			62			100			114			188
		1150	71.9			49.2			79			90			149
		960	60.0			41.0			66			75			124
C18	18	1740	96.7	6.7	17.6	67	11.6	16.8	114	12.6	17.3	126	21.7	17.5	212
		1450	80.6			56			95			105			177
		1150	63.9			44.4			75			83			140
		960	53.3			37.1			63			70			117
C20	20	1740	87.0	6.7	18.7	60	11.6	17.9	106	13.2	18.4	120	21.7	20.2	197
		1450	72.5			50			88			100			164
		1150	57.5			39.7			70			79			130
		960	48.0			33.1			58			66			109
C22	22.4	1740	77.7	6.7	22.0	54	11.6	21.1	94	14.2	21.6	115	21.7	21.9	176
		1450	64.7			45.0			78			96			147
		1150	51.3			35.7			62			76			117
		960	42.9			29.8			52			64			97
C25	25	1740	69.6	6.7	24.9	49.2	11.6	23.9	84	15.5	24.5	113	21.7	24.8	157
		1450	58.0			41.0			70			94			131
		1150	46.0			32.5			56			75			104
		960	38.4			27.1			46.3			62			87
C28	28	1740	62.1	6.7	27.7	43.2	11.6	26.5	76	15.5	27.2	101	21.7	28.3	142
		1450	51.8			36.0			63			84			118
		1150	41.1			28.6			50			67			94
		960	34.3			23.8			41.7			56			78
C32	31.5	1740	55.2	6.7	31.2	38.4	11.6	29.9	67	15.5	30.7	89	21.7	31.9	126
		1450	46.0			32.0			56			74			105
		1150	36.5			25.4			44.4			59			83
		960	30.5			21.2			37.1			49.0			70
C36	35.5	1740	49.0	6.7	33.2	33.6	11.6	31.8	59	15.5	32.7	79	21.7	37.0	110
		1450	40.8			28.0			49.0			66			92
		1150	32.4			22.2			38.9			52			73
		960	27.0			18.5			32.4			43.7			61
C40	40	1740	43.5	6.7	39.1	30.0	11.6	37.5	53	15.5	38.4	71	21.7	40.0	100
		1450	36.3			25.0			44.0			59			83
		1150	28.8			19.8			34.9			46.8			66
		960	24.0			16.6			29.1			39.1			55
C45	45	1740	38.7	6.7	44.3	26.4	11.6	42.5	46.8	15.5	43.6	61	21.7	45.3	86
		1450	32.2			22.0			39.0			51			72
		1150	25.6			17.4			30.9			40.4			57
		960	21.3			14.6			25.8			33.8			47.7
C50	50	1740	34.8	6.7	48.7	24.0	11.6	46.7	42.0	15.5	47.9	55	21.7	49.8	79
		1450	29.0			20.0			35.0			46.0			66
		1150	23.0			15.9			27.8			36.5			52
		960	19.2			13.2			23.2			30.5			43.7
C56	56	1740	31.1	6.7	56.2	21.6	11.6	53.9	37.2	15.5	55.3	50	21.7	57.5	71
		1450	25.9			18.0			31.0			42.0			59
		1150	20.5			14.3			24.6			33.3			46.8
		960	17.1			11.9			20.5			27.8			39.1
C63	63	1740	27.6	6.7	60.9	19.2	11.6	58.4	32.4	15.5	59.9	44.4	21.7	62.3	61
		1450	23.0			16.0			27.0			37.0			51
		1150	18.3			12.7			21.4			29.3			40.4
		960	15.2			10.6			17.9			24.5			33.8
C71	71	1740	24.5	6.7	68.7	16.8	11.6	65.8	28.8	15.5	67.5	39.6	20.0	70.2	50
		1450	20.4			14.0			24.0			33.0			42.0
		1150	16.2			11.1			19.0			26.2			33.3
		960	13.5			9.3			15.9			21.8			27.8
C80	80	1740	21.8	6.7	78.8	14.9	11.6	75.5	25.2	15.5	77.5	34.8	20.0	80.5	44.7
		1450	18.1			12			21.0			29.0			37
		1150	14.4			9.9			16.7			23.0			29.6
		960	12.0			8.2			13.9			19.2			24.7
C90	90	1740	19.3	6.7	85.8	13.3	11.6	82.3	22.8	15.5	84.4	31.2	20.0	87.8	39.8
		1450	16.1			11.0			19.0			26.0			33
		1150	12.8			8.8			15.1			20.6			26.3
		960	10.7			7.3			12.6			17.2			21.9

B3 (iN=16-90)

B308			B309			B310			B311			B312			n_{2N} (r/min)	n_1 (r/min)	i_N	Code
T_{2N} (kN·m)	i_{ex}	P_{1N} (kW)	T_{2N} (kN·m)	i_{ex}	P_{1N} (kW)	T_{2N} (kN·m)	i_{ex}	P_{1N} (kW)	T_{2N} (kN·m)	i_{ex}	P_{1N} (kW)	T_{2N} (kN·m)	i_{ex}	P_{1N} (kW)				
21.5	15.3	245	31.0	15.6	354	35.6	15.4	406	60	15.4	683	67	15.5	756	109.0	1740	16	C16
		204			295			338			569			630	90.6	1450		
		162			234			268			451			500	71.9	1150		
		135			195			224			377			417	60.0	960		
23.1	17.2	232	34.0	17.6	341	37.5	17.4	377	62	17.4	624	70	17.4	701	96.7	1740	18	C18
		193			284			314			520			584	80.6	1450		
		153			225			249			412			463	63.9	1150		
		128			188			208			344			387	53.3	960		
25.0	19.9	227	35.7	20.4	325	39.3	20.1	358	64	20.1	577	73	20.2	661	87.0	1740	20	C20
		189			271			298			481			551	72.5	1450		
		150			215			236			381			437	57.5	1150		
		125			179			197			318			365	48.0	960		
27.2	21.6	215	35.7	22.1	290	43.8	21.8	340	64	21.8	516	78	21.8	614	77.7	1740	22.4	C22
		179			242			283			430			512	64.7	1450		
		142			192			224			341			406	51.3	1150		
		119			160			187			285			339	42.9	960		
27.2	24.4	197	35.7	25.0	260	43.8	24.7	319	64	24.7	462	78	24.7	563	69.6	1740	25	C25
		164			217			266			385			469	58.0	1450		
		130			172			211			305			372	46.0	1150		
		109			144			176			255			311	38.4	960		
27.2	27.9	178	35.7	27.1	233	43.8	26.7	287	64	28.9	416	78	29.0	505	62.1	1740	28	C28
		148			194			239			347			421	51.8	1450		
		117			154			190			275			334	41.1	1150		
		98			128			158			230			279	34.3	960		
27.2	31.5	157	35.7	30.5	208	43.8	30.1	256	64	32.6	370	78	32.6	450	55.2	1740	31.5	C32
		131			173			213			308			375	46.0	1450		
		104			137			169			244			297	36.5	1150		
		87			115			141			204			248	30.5	960		
27.2	36.5	138	35.7	35.4	182	43.8	34.9	223	64	37.7	324	78	37.8	394	49.0	1740	35.5	C36
		115			152			186			270			328	40.8	1450		
		91			121			148			214			260	32.4	1150		
		76			101			123			179			217	27.0	960		
27.2	39.4	125	35.7	38.2	164	43.8	37.8	202	64	40.8	293	78	40.9	356	43.5	1740	40	C40
		104			137			168			244			297	36.3	1450		
		82			109			133			194			236	28.8	1150		
		69			91			111			162			197	24.0	960		
27.2	44.7	108	35.7	43.3	143	43.8	42.8	175	64	46.3	254	78	46.3	308	38.7	1740	45	C45
		90			119			146			212			257	32.2	1450		
		71			94			116			168			204	25.6	1150		
		60			79			97			140			170	21.3	960		
27.2	49.2	98	35.7	47.7	130	43.8	47.1	158	64	50.9	230	78	51.0	281	34.8	1740	50	C50
		82			108			132			192			234	29.0	1450		
		65			86			105			152			186	23.0	1150		
		54			72			87			127			155	19.2	960		
27.2	56.7	88	35.7	55.0	116	43.8	54.3	143	64	58.7	208	78	58.8	253	31.1	1740	56	C56
		73			97			119			173			211	25.9	1450		
		58			77			94			137			167	20.5	1150		
		48.3			64			79			115			140	17.1	960		
27.2	61.5	79	35.7	59.6	103	43.8	58.8	127	64	63.6	185	78	63.7	226	27.6	1740	63	C63
		66			86			106			154			188	23.0	1450		
		52			68			84			122			149	18.3	1150		
		43.7			57			70			102			124	15.2	960		
27.2	69.3	68	34.0	67.2	86	43.8	66.3	112	60	71.7	152	78	71.8	196	24.5	1740	71	C71
		57			72			93			127			163	20.4	1450		
		45.2			57			74			101			129	16.2	1150		
		37.7			47.7			62			84			108	13.5	960		
27.2	79.5	60	34.0	77.0	77	43.8	76.1	100	60	82.2	135	78	82.3	175	21.8	1740	80	C80
		50			64			83			113			146	18.1	1450		
		39.7			51			66			89			116	14.4	1150		
		33.1			42.3			55			75			97	12.0	960		
25.2	86.6	52	34.0	84.0	68	43.8	82.9	88	60	89.6	120	78	89.7	152	19.3	1740	90	C90
		43.0			57			73			100			127	16.1	1450		
		34.1			45.0			58			79			101	12.8	1150		
		28.5			37.6			48.3			66			84	10.7	960		

B3 (iN=16-90) B3 (iN=16-90)

Code	i_N	n_1 (r/min)	n_{2N} (r/min)	B313 T2N (kN • m)	B313 iex	B313 P1N (kW)	B314 T2N (kN • m)	B314 iex	B314 P1N (kW)	B315 T2N (kN • m)	B315 iex	B315 P1N (kW)
C16	16	1740	108.8	91	14.898	1113	112	14.909	1369	148	15.260	1767*
		1450	90.6			927			1141			1473
		1150	71.9			736			905			1168
		960	60.0			614			755			975
C18	18	1740	96.7	91	16.794	987	112	16.806	1214	148	17.202	1568*
		1450	80.6			823			1012			1306
		1150	63.9			653			802			1036
		960	53.3			545			670			865
C20	20	1740	87.0	91	19.445	853	119	19.460	1114	153	19.918	1400*
		1450	72.5			711			928			1166
		1150	57.5			564			736			925
		960	48.0			470			615			772
C22	22.4	1740	77.7	91	21.032	788	119	21.048	1030	153	21.543	1294*
		1450	64.7			657			858			1078
		1150	51.3			521			681			855
		960	42.9			435			568			714
C25	25	1740	69.6	91	23.836	696	125	23.854	955	153	24.415	1142*
		1450	58.0			580			796			951
		1150	46.0			460			631			755
		960	38.4			384			527			630
C28	28	1740	62.1	91	27.465	604	125	27.485	829	153	27.279	1022*
		1450	51.8			503			691			852
		1150	41.1			399			548			675
		960	34.3			333			457			564
C32	31.5	1740	55.2	91	30.960	536	125	30.983	735	153	30.751	907*
		1450	46.0			446			613			755
		1150	36.5			354			486			599
		960	30.5			295			406			500
C36	35.5	1740	49.0	91	35.849	463	125	35.876	635	153	35.607	783*
		1450	40.8			385			529			652
		1150	32.4			306			420			517
		960	27.0			255			350			432
C40	40	1740	43.5	91	38.774	428	125	38.803	587	153	38.512	724*
		1450	36.3			356			489			603
		1150	28.8			283			388			478
		960	24.0			236			324			399
C45	45	1740	38.7	91	43.944	377	125	43.976	518	153	43.647	639*
		1450	32.2			314			432			532
		1150	25.6			249			342			422
		960	21.3			208			286			352
C50	50	1740	34.8	91	48.338	343	125	48.374	471	153	48.012	581
		1450	29.0			286			392			484
		1150	23.0			227			311			384
		960	19.2			189			260			320
C56	56	1740	31.1	91	55.775	297	125	55.816	408	153	55.398	503
		1450	25.9			248			340			419
		1150	20.5			196			270			333
		960	17.1			164			225			278
C63	63	1740	27.6	91	60.423	274	125	60.468	377	153	60.015	464
		1450	23.0			229			314			387
		1150	18.3			181			249			307
		960	15.2			151			208			256
C71	71	1740	24.5	91	68.113	243	125	68.164	334	153	67.653	412
		1450	20.4			203			278			343
		1150	16.2			161			221			272
		960	13.5			134			184			227
C80	80	1740	21.8	91	78.122	212	125	78.180	291	153	77.595	359
		1450	18.1			177			243			299
		1150	14.4			140			193			237
		960	12.0			117			161			198
C90	90	1740	19.3	91	85.141	195	125	85.204	267	153	84.566	330
		1450	16.1			162			223			275
		1150	12.8			129			177			218
		960	10.7			107			147			182

卧式安装齿轮箱应采用强制润滑 Forced lubricati on required on horizontal gearbox

* 敬请垂询 * On request

B316 T2N (kN • m)	B316 iex	B316 P1N (kW)	B317 T2N (kN • m)	B317 iex	B317 P1N (kW)	B318 T2N (kN • m)	B318 iex	B318 P1N (kW)	n_{2N} (r/min)	n_1 (r/min)	i_N	Code
183	15.248	2187*	220	15.643	2562*	253	16.020	2877*	108.8	1740	16	C16
		1822			2135			2398	90.6	1450		
		1445			1694			1902	71.9	1150		
		1206			1414			1588	60.0	960		
183	17.189	1940*	220	18.113	2213*	265	18.058	2674*	96.7	1740	18	C18
		1616			1844			2228	80.6	1450		
		1282			1463			1767	63.9	1150		
		1070			1221			1475	53.3	960		
183	19.903	1675*	220	19.591	2046*	265	20.910	2309*	87.0	1740	20	C20
		1396			1705			1924	72.5	1450		
		1107			1352			1526	57.5	1150		
		924			1129			1274	48.0	960		
190	21.527	1608*	220	22.943	1747*	265	22.616	2135*	77.7	1740	22.4	C22
		1340			1456			1779	64.7	1450		
		1063			1155			1411	51.3	1150		
		887			964			1178	42.9	960		
190	24.397	1419*	220	24.688	1624*	265	26.486	1823*	69.6	1740	25	C25
		1182			1353			1519	58.0	1450		
		938			1073			1205	46.0	1150		
		783			896			1006	38.4	960		
190	27.259	1270*	220	27.830	1440*	265	28.500	1694*	62.1	1740	28	C28
		1058			1200			1412	51.8	1450		
		839			952			1120	41.1	1150		
		701			795			935	34.3	960		
190	30.728	1127*	220	32.224	1244*	265	32.127	1503*	55.2	1740	31.5	C32
		939			1037			1252	46.0	1450		
		745			822			993	36.5	1150		
		622			686			829	30.5	960		
190	35.580	973*	220	34.853	1150*	265	37.200	1298*	49.0	1740	35.5	C36
		811			958			1082	40.8	1450		
		643			760			858	32.4	1150		
		537			635			716	27.0	960		
190	38.483	900*	220	40.817	982*	265	40.235	1200*	43.5	1740	40	C40
		750			818			1000	36.3	1450		
		595			649			793	28.8	1150		
		496			542			662	24.0	960		
190	43.615	794*	220	43.450	923*	265	47.120	1025*	38.7	1740	45	C45
		661			769			854	32.2	1450		
		525			610			677	25.6	1150		
		438			509			565	21.3	960		
190	47.976	722*	220	50.135	800*	265	50.160	963*	34.8	1740	50	C50
		601			666			802	29.0	1450		
		477			528			636	23.0	1150		
		398			441			531	19.2	960		
190	55.357	625	220	54.313	738*	265	57.877	834*	31.1	1740	56	C56
		521			615			695	25.9	1450		
		413			488			551	20.5	1150		
		345			407			460	17.1	960		
190	59.970	577	220	61.225	655*	265	62.700	770*	27.6	1740	63	C63
		481			546			642	23.0	1450		
		382			433			509	18.3	1150		
		318			361			425	15.2	960		
190	67.603	512	220	70.222	571*	265	70.680	683*	24.5	1740	71	C71
		427			476			569	20.4	1450		
		338			377			451	16.2	1150		
		283			315			377	13.5	960		
190	77.537	446	220	76.531	524*	265	81.067	596*	21.8	1740	80	C80
		372			436			496	18.1	1450		
		295			346			394	14.4	1150		
		246			289			329	12.0	960		
190	84.503	410				265	88.350	546*	19.3	1740	90	C90
		341						455	16.1	1450		
		271						361	12.8	1150		
		226						302	10.7	960		

卧式安装齿轮箱应采用强制润滑 Forced lubricati on required on horizontal gearbox

* 敬请垂询 * On request

B3 (iN=16-90)

Code	i_N	n_1 (r/min)	n_{2N} (r/min)	B319 T_{2N} (kN·m)	B319 i_{ex}	B319 P_{1N} (kW)	B320 T_{2N} (kN·m)	B320 i_{ex}	B320 P_{1N} (kW)	B321 T_{2N} (kN·m)	B321 i_{ex}	B321 P_{1N} (kW)	B322 T_{2N} (kN·m)	B322 i_{ex}	B322 P_{1N} (kW)
C16	16	1740	108.8	330	15.749	3818*	380	15.809	4380*						
		1450	90.6			3182*			3650*						
		1150	71.9			2523*			2895*						
		960	60.0			2106			2416						
C18	18	1740	96.7	330	18.235	3297*	380	17.821	3885*	460	17.593	4764*			
		1450	80.6			2748*			3238*			3970*			
		1150	63.9			2179*			2568*			3149*			
		960	53.3			1819			2143			2628			
C20	20	1740	87.0	330	19.723	3048*	380	20.635	3355*	460	19.832	4226*	520	19.414	4880*
		1450	72.5			2540*			2796*			3522*			4067*
		1150	57.5			2015			2218*			2793*			3225*
		960	48.0			1682			1851			2332			2693
C22	22.4	1740	77.7	330	23.098	2603*	380	22.318	3102*	460	22.963	3650*	520	21.884	4329*
		1450	64.7			2169			2585*			3042*			3608*
		1150	51.3			1720			2050			2412			2861
		960	42.9			1436			1712			2014			2389
C25	25	1740	69.6	330	24.449	2459*	380	26.137	2649*	460	24.837	3374*	520	25.340	3739*
		1450	58.0			2049			2207			2812*			3116*
		1150	46.0			1625			1751			2230*			2471*
		960	38.4			1357			1461			1862			2063
C28	28	1740	62.1	330	27.560	2182*	380	27.665	2503*	460	29.086	2882*	520	27.407	3457*
		1450	51.8			1818			2086			2401			2881*
		1150	41.1			1442			1654			1904			2285*
		960	34.3			1204			1381			1590			1907
C32	31.5	1740	55.2	330	31.912	1884*	380	31.186	2059*	460	31.912	2626*	520	32.097	2952*
		1450	46.0			1570			1850			2189			2460
		1150	36.5			1245			1467			1736			1951
		960	30.5			1040			1225			1449			1629
C36	35.5	1740	49.0	330	34.516	1742*	380	36.111	1917*	460	34.516	2428*	520	35.215	2690*
		1450	40.8			1452			1598			2023			2242
		1150	32.4			1151			1267			1605			1778
		960	27.0			961			1058			1340			1484
C40	40	1740	43.5	330	40.422	1487*	380	39.057	1773*	460	40.422	2073*	520	38.088	2214*
		1450	36.3			1240			1477			1728			2073
		1150	28.8			983			1172			1370			1644
		960	24.0			821			978			1144			1372
C45	45	1740	38.7	330	43.029	1397*	380	45.740	1514*	460	43.029	1948*	520	44.606	2124*
		1450	32.2			1164			1261			1623			1770
		1150	25.6			924			1000			1287			1404
		960	21.3			771			835			1075			1172
C50	50	1740	34.8	330	49.649	1211*	380	48.691	1422*	460	49.649	1688*	520	47.483	1995*
		1450	29.0			1009			1185			1407			1663
		1150	23.0			800			940			1116			1319
		960	19.2			668			785			931			1101
C56	56	1740	31.1	330	53.787	1118*	380	56.182	1232*	460	53.787	1558*	520	54.788	1729*
		1450	25.9			932			1027			1299			1441
		1150	20.5			739			814			1030			1143
		960	17.1			617			680			860			954
C63	63	1740	27.6	330	60.632	992*	380	60.864	1138*	460	60.632	1382*	520	59.354	1596*
		1450	23.0			826			948			1152			1330
		1150	18.3			655			752			914			1055
		960	15.2			547			628			763			881
C71	71	1740	24.5	330	69.542	865*	380	68.610	1009*	460	69.542	1205*	520	66.908	1416*
		1450	20.4			720			841			1004			1180
		1150	16.2			571			667			797			936
		960	13.5			477			557			665			781
C80	80	1740	21.8	330	75.790	793*	380	78.693	880*	460	75.790	1106*	520	76.741	1235*
		1450	18.1			661			733			922			1029
		1150	14.4			524			581			731			816
		960	12.0			438			485			610			681
C90	90	1740	19.3	330	85.570	703*	380	85.763	807*	460	85.570	979*	520	83.635	1133*
		1450	16.1			586			673			816			944
		1150	12.8			464			534			647			749
		960	10.7			388			445			540			625

卧式安装齿轮箱应采用强制润滑 Forced lubricati on required on horizontal gearbox

* 敬请垂询 * On request

BONENG

B3 (iN=16-90)

B323 T_{2N} (kN·m)	B323 i_{ex}	B323 P_{1N} (kW)	B324 T_{2N} (kN·m)	B324 i_{ex}	B324 P_{1N} (kW)	B325 T_{2N} (kN·m)	B325 i_{ex}	B325 P_{1N} (kW)	B326 T_{2N} (kN·m)	B326 i_{ex}	B326 P_{1N} (kW)	n_{2N} (r/min)	n_1 (r/min)	i_N	Code
												108.8	1740	16	C16
												90.6	1450		
												71.9	1150		
												60.0	960		
												96.7	1740	18	C18
												80.6	1450		
												63.9	1150		
												53.3	960		
		*										87.0	1740	20	C20
640	19.652	*										72.5	1450		
		*										57.5	1150		
		3274										48.0	960		
		*			*			*			*	77.7	1740	22.4	C22
640	22.215	*	725	22.272	*	860	22.541	*	1030	22.588	*	64.7	1450		
		*			*			*			*	51.3	1150		
		2896			3272			3835			4584	42.9	960		
		*			*			*			*	69.6	1740	25	C25
640	24.988	*	725	25.177	*	860	25.098	*	1030	25.151	*	58.0	1450		
		*			*			*			*	46.0	1150		
		2575			2895			3445			4117	38.4	960		
		*			*			*			*	62.1	1740	28	C28
640	28.386	*	725	28.320	*	860	28.143	*	1030	28.202	*	51.8	1450		
		*			*			*			*	41.1	1150		
		2266			2573			3072			3671	34.3	960		
		*			*			*			*	55.2	1740	31.5	C32
640	30.704	*	725	32.171	*	860	32.125	*	1030	32.192	*	46.0	1450		
		*			*			*			*	36.5	1150		
		2095			2265			2691			3216	30.5	960		
		*			*			*			*	49.0	1740	35.5	C36
640	34.537	*	725	34.797	*	860	35.770	*	1030	35.845	*	40.8	1450		
		*			*			*			*	32.4	1150		
		1863			2094			2417			2889	27.0	960		
		*			*			*			*	43.5	1740	40	C40
640	39.232	*	725	39.141	*	860	40.109	*	1030	40.194	*	36.3	1450		
		*			*			*			*	28.8	1150		
		1640			1862			2155			2576	24.0	960		
		*			*			*			*	38.7	1740	45	C45
640	42.633	*	725	44.463	*	860	43.300	*	1030	43.391	*	32.2	1450		
		*			*			2392			*	25.6	1150		
		1508			1639			1997			2386	21.3	960		
		*			*			*			*	34.8	1740	50	C50
640	49.078	*	725	48.351	*	860	50.059	*	1030	50.164	*	29.0	1450		
		1570			1806			2069			2473	23.0	1150		
		1311			1507			1727			2064	19.2	960		
		*			*			*			*	31.1	1740	56	C56
640	52.853	*	725	55.622	*	860	53.003	*	1030	53.115	*	25.9	1450		
		1458			1570			1954			2335	20.5	1150		
		1217			1310			1631			1949	17.1	960		
		*			*			*			*	27.6	1740	63	C63
640	60.728	*	725	59.901	*	860	60.071	*	1030	60.197	*	23.0	1450		
		1269			1457			1724			2060	18.3	1150		
		1059			1217			1439			1720	15.2	960		
		*			*			*			*	24.5	1740	71	C71
640	67.861	*	725	68.825	*	860	67.805	*	1030	67.948	*	20.4	1450		
		1136			1268			1527			1825	16.2	1150		
		948			1059			1275			1524	13.5	960		
		*			*			*			*	21.8	1740	80	C80
640	74.223	*	725	76.909	*	860	80.134	*	1030	80.302	*	18.1	1450		
		1038			1135			1292			1545	14.4	1150		
		867			948			1079			1289	12.0	960		
					*							19.3	1740	90	C90
			725	84.120	1309							16.1	1450		
					1038							12.8	1150		
					866							10.7	960		

卧式安装齿轮箱应采用强制润滑 Forced lubricati on required on horizontal gearbox

* 敬请垂询 * On request

B4 (iN=100-400)

Code	iN	n_1 (r/min)	n_{2N} (r/min)	B405 T_{2N} (kN·m)	B405 i_{ex}	B405 P_{1N} (kW)	B406 T_{2N} (kN·m)	B406 i_{ex}	B406 P_{1N} (kW)	B407 T_{2N} (kN·m)	B407 i_{ex}	B407 P_{1N} (kW)	B408 T_{2N} (kN·m)	B408 i_{ex}	B408 P_{1N} (kW)
D10	100	1740	17.4	11.6	96.3	20.9	15.5	98.9	27.8	22.0	98.4	39.6	27.5	97.1	49.2
		1450	14.5			17.4			23.2			33.0			41.0
		1150	11.5			13.8			18.4			26.2			32.5
		960	9.6			11.5			15.4			21.8			27.1
D11	112	1740	15.5	11.6	109.2	18.6	15.5	112.0	24.4	22.0	111.5	34.8	27.5	110.0	44.4
		1450	12.9			15.5			20.3			29.0			37.0
		1150	10.3			12.3			16.1			23.0			29.3
		960	8.57			10.3			13.4			19.2			24.5
D13	125	1740	13.9	11.6	119.4	16.2	15.5	122.6	22.1	22.0	123.9	31.2	27.5	122.2	39.6
		1450	11.6			13.5			18.4			26.0			33.0
		1150	9.20			10.7			14.6			20.6			26.2
		960	7.68			8.9			12.2			17.2			21.8
D14	140	1740	12.4	11.6	134.6	14.5	15.5	138.1	19.7	22.0	139.6	27.6	27.5	137.8	34.8
		1450	10.4			12.1			16.4			23.0			29.0
		1150	8.21			9.6			13.0			18.2			23.0
		960	6.86			8.0			10.9			15.2			19.2
D16	160	1740	10.9	11.6	143.3	12.7	15.5	147.1	17.4	22.0	148.6	24.0	27.5	146.7	30.0
		1450	9.06			10.6			14.5			20.0			25.0
		1150	7.19			8.4			11.5			15.9			19.8
		960	6.00			7.0			9.6			13.2			16.6
D18	180	1740	9.67	11.6	168.6	11.6	15.5	173.0	15.1	22.0	174.9	21.6	27.5	172.6	27.6
		1450	8.06			9.7			12.6			18.0			23.0
		1150	6.39			7.7			10.0			14.3			18.2
		960	5.33			6.4			8.3			11.9			15.2
D20	200	1740	8.70	11.6	191.1	10.6	15.5	196.1	13.9	22.0	198.2	19.2	27.5	195.6	24.0
		1450	7.25			8.8			11.6			16.0			20.0
		1150	5.75			7.0			9.2			12.7			15.9
		960	4.80			5.8			7.7			10.6			13.2
D22	224	1740	7.77	11.6	210.2	9.4	15.5	215.7	12.4	22.0	218.0	18.0	27.5	215.1	21.6
		1450	6.47			7.8			10.3			15.0			18.0
		1150	5.13			6.2			8.2			11.9			14.3
		960	4.29			5.2			6.8			9.9			11.9
D25	250	1740	6.96	11.6	242.5	8.4	15.5	248.9	11.3	22.0	251.6	15.6	27.5	248.2	19.2
		1450	5.80			7.0			9.4			13.0			16.0
		1150	4.60			5.6			7.5			10.3			12.7
		960	3.84			4.63			6.2			8.6			10.6
D28	280	1740	6.21	11.6	262.7	7.6	15.5	269.6	10.1	22.0	272.5	14.4	27.5	268.9	18.0
		1450	5.18			6.3			8.4			12.0			15.0
		1150	4.11			5.0			6.7			9.5			11.9
		960	3.43			4.17			5.6			7.9			9.9
D32	315	1740	5.52	11.2	296.2	6.5	15.5	303.9	8.9	20.5	307.2	12.0	27.5	303.2	15.6
		1450	4.60			5.4			7.4			10.0			13.0
		1150	3.65			4.28			5.9			7.9			10.3
		960	3.05			3.58			4.90			6.6			8.6
D36	355	1740	4.90	11.2	339.7	5.6	15.5	348.6	7.9	20.5	352.3	10.6	26.5	347.7	13.2
		1450	4.08			4.70			6.6			9			11.0
		1150	3.24			3.73			5.2			7.0			8.7
		960	2.70			3.11			4.37			5.8			7.3
D40	400	1740	4.35	11.2	370.2	5.0	14.5	379.9	6.6	20.5	384.0	9.4	26.5	379.0	12.0
		1450	3.63			4.20			5.5			8			10.0
		1150	2.88			3.33			4.36			6.2			7.9
		960	2.40			2.78			3.64			5.2			6.6

B4 (iN=100-400)

B409 T_{2N} (kN·m)	B409 i_{ex}	B409 P_{1N} (kW)	B410 T_{2N} (kN·m)	B410 i_{ex}	B410 P_{1N} (kW)	B411 T_{2N} (kN·m)	B411 i_{ex}	B411 P_{1N} (kW)	B412 T_{2N} (kN·m)	B412 i_{ex}	B412 P_{1N} (kW)	n_{2N} (r/min)	n_1 (r/min)	iN	Code
36.0	104.8	65	44.5	103.5	80	62	99.8	112	78	99.9	142	17.4	1740	100	D10
		54			67			93			118	14.5	1450		
		42.8			53			74			94	11.5	1150		
		35.8			44.4			62			78	9.6	960		
36.0	116.5	58	44.5	115.0	72	62	113.1	100	78	113.2	126	15.5	1740	112	D11
		48.0			60			83			105	12.9	1450		
		38.1			47.6			66			83	10.3	1150		
		31.8			39.7			55			70	8.57	960		
36.0	131.3	52	44.5	129.6	64	62	129.2	89	78	129.4	114	13.9	1740	125	D13
		43.0			53			74			95	11.6	1450		
		34.1			42.0			59			75	9.20	1150		
		28.5			35.1			49			63	7.68	960		
36.0	139.8	45.6	44.5	138.0	56	62	145.7	80	78	145.9	101	12.4	1740	140	D14
		38.0			47.0			67			84	10.4	1450		
		30.1			37.3			53			67	8.21	1150		
		25.2			31.1			44.4			56	6.86	960		
36.0	164.4	40.8	44.5	162.4	50	62	168.7	70	78	168.9	88	10.9	1740	160	D16
		34.0			42.0			58			73	9.06	1450		
		27.0			33.3			46.0			58	7.19	1150		
		22.5			27.8			38.4			48.3	6.00	960		
36.0	186.3	36.0	44.5	184.0	44.4	62	182.5	61	78	182.7	78	9.67	1740	180	D18
		30.0			37.0			51			65	8.06	1450		
		23.8			29.3			40.4			52	6.39	1150		
		19.9			24.5			33.8			43.0	5.33	960		
36.0	205.0	32.4	44.5	202.4	39.6	62	206.8	55	78	207.1	71	8.70	1740	200	D20
		27.0			33.0			46.0			59	7.25	1450		
		21.4			26.2			36.5			46.8	5.75	1150		
		17.9			21.8			30.5			39.1	4.80	960		
36.0	236.5	28.8	44.5	233.5	36.0	62	227.5	50	78	227.8	62	7.77	1740	224	D22
		24.0			30.0			42.0			52	6.47	1450		
		19.0			23.8			33.3			41.2	5.13	1150		
		15.9			19.9			27.8			34.4	4.29	960		
36.0	256.2	25.2	44.5	253.0	31.2	62	262.5	44.4	78	262.8	56	6.96	1740	250	D25
		21.0			26.0			37.0			47.0	5.80	1450		
		16.7			20.6			29.3			37.3	4.60	1150		
		13.9			17.2			24.5			31.1	3.84	960		
36.0	288.8	22.8	44.5	285.2	27.6	62	284.3	39.6	78	284.7	52	6.21	1740	280	D28
		19.0			23.0			33.0			43.0	5.18	1450		
		15.1			18.2			26.2			34.1	4.11	1150		
		12.6			15.2			21.8			28.5	3.43	960		
34.0	331.3	19.2	44.5	327.1	25.2	62	320.5	34.8	78	321.0	45.6	5.52	1740	315	D32
		16.0			21.0			29.0			38.0	4.60	1450		
		12.7			16.7			23.0			30.1	3.65	1150		
		10.6			13.9			19.2			25.2	3.05	960		
34.0	361.0	16.8	44.5	356.5	22.8	60	327.6	30.8	78	368.2	39.6	4.90	1740	355	D36
		14.0			19.0			26			33.0	4.08	1450		
		11.1			15.1			20.4			26.2	3.24	1150		
		9.3			12.6			17.0			21.8	2.70	960		
						60	400.7	27.4	74	401.2	33.6	4.35	1740	400	D40
								23			28.0	3.63	1450		
								18.1			22.2	2.88	1150		
								15.1			18.5	2.40	960		

B4 (iN=90-400)

Code	iN	n_1 (r/min)	n_{2N} (r/min)	B413 T_{2N} (kN • m)	B413 i_{ex}	B413 P_{1N} (kW)	B414 T_{2N} (kN • m)	B414 i_{ex}	B414 P_{1N} (kW)	B415 T_{2N} (kN • m)	B415 i_{ex}	B415 P_{1N} (kW)
C90	90	1740	19.3									
		1450	16.1									
		1150	12.8									
		960	10.7									
D10	100	1740	17.4	91	96.935	171	125	97.007	235	153	96.280	290
		1450	14.5			143			196			241
		1150	11.5			113			155			191
		960	9.6			94			130			160
D11	112	1740	15.5	91	109.859	151	125	109.941	207	153	109.118	255
		1450	12.9			126			173			213
		1150	10.3			100			137			169
		960	8.6			83			114			141
D13	125	1740	13.9	91	119.014	139	125	119.103	191	153	127.783	218
		1450	11.6			116			159			182
		1150	9.2			92			126			144
		960	7.7			77			106			120
D14	140	1740	12.4	91	134.162	124	125	134.261	170	153	144.046	194
		1450	10.4			103			141			161
		1150	8.2			82			112			128
		960	6.9			68			94			107
D16	160	1740	10.9	91	155.345	107	125	155.461	146	153	166.790	167
		1450	9.1			89			122			139
		1150	7.2			71			97			110
		960	6.0			59			81			92
D18	180	1740	9.7	91	168.020	99	125	168.145	135	153	180.399	155
		1450	8.1			82			113			129
		1150	6.4			65			90			102
		960	5.3			54			75			85
D20	200	1740	8.7	91	190.423	87	125	190.565	120	153	204.452	136
		1450	7.3			73			100			114
		1150	5.8			58			79			90
		960	4.8			48			66			75
D22	224	1740	7.8	91	209.465	79	125	209.621	109	153	224.897	124
		1450	6.5			66			91			103
		1150	5.1			52			72			82
		960	4.3			44			60			68
D25	250	1740	7.0	91	241.691	69	125	241.871	94	153	259.497	107
		1450	5.8			57			78			90
		1150	4.6			45			62			71
		960	3.8			38			52			59
D28	280	1740	6.2	91	261.832	63	125	262.026	87	153	281.122	99
		1450	5.2			53			72			83
		1150	4.1			42			57			66
		960	3.4			35			48			55
D32	315	1740	5.5	91	295.156	56	125	295.375	77	153	316.901	88
		1450	4.6			47			64			73
		1150	3.7			37			51			58
		960	3.0			31			43			49
D36	355	1740	4.9	91	338.530	49	125	338.782	67	153	363.470	77
		1450	4.1			41			56			64
		1150	3.2			32			44			51
		960	2.7			27			37			42
D40	400	1740	4.4	91	368.944	45	125	369.219	62	153	396.126	70
		1450	3.6			37			51			59
		1150	2.9			30			41			47
		960	2.4			25			34			39

B4 (iN=90-400)

B416 T_{2N} (kN • m)	B416 i_{ex}	B416 P_{1N} (kW)	B417 T_{2N} (kN • m)	B417 i_{ex}	B417 P_{1N} (kW)	B418 T_{2N} (kN • m)	B418 i_{ex}	B418 P_{1N} (kW)	n_{2N} (r/min)	n_1 (r/min)	iN	Code
			220	87.132	460				19.3	1740	90	C90
					383				16.1	1450		
					304				12.8	1150		
					254				10.7	960		
190	96.209	360	220	98.750	406	265	100.588	480	17.4	1740	100	D10
		300			338			400	14.5	1450		
		238			268			317	11.5	1150		
		199			224			265	9.6	960		
190	109.036	317	220	115.641	347	265	114.000	424	15.5	1740	112	D11
		265			289			353	12.9	1450		
		210			229			280	10.3	1150		
		175			191			234	8.6	960		
190	127.687	271	220	130.359	307	265	133.500	362	13.9	1740	125	D13
		226			256			301	11.6	1450		
		179			203			239	9.2	1150		
		150			170			200	7.7	960		
190	143.939	241	220	150.943	266	265	150.491	321	12.4	1740	140	D14
		200			221			267	10.4	1450		
		159			176			212	8.2	1150		
		133			147			177	6.9	960		
190	166.666	208	220	163.259	246	265	174.253	277	10.9	1740	160	D16
		173			205			231	9.1	1450		
		137			162			183	7.2	1150		
		115			135			153	6.0	960		
190	180.265	192	220	185.026	217	265	188.471	256	9.7	1740	180	D18
		160			181			213	8.1	1450		
		127			143			169	6.4	1150		
		106			120			141	5.3	960		
190	204.300	169	220	203.529	197	265	213.600	226	8.7	1740	200	D20
		141			164			188	7.3	1450		
		112			130			149	5.8	1150		
		93			109			125	4.8	960		
190	224.730	154	220	234.841	171	265	234.960	205	7.8	1740	224	D22
		128			142			171	6.5	1450		
		102			113			136	5.1	1150		
		85			94			113	4.3	960		
190	259.304	134	220	254.411	158	265	271.108	178	7.0	1740	250	D25
		111			131			148	5.8	1450		
		88			104			118	4.6	1150		
		74			87			98	3.8	960		
190	280.912	123	220	286.791	140	265	293.700	164	6.2	1740	280	D28
		103			116			137	5.2	1450		
		81			92			109	4.1	1150		
		68			77			91	3.4	960		
190	316.665	109	220	328.936	122	265	331.080	146	5.5	1740	315	D32
		91			102			122	4.6	1450		
		72			81			96	3.7	1150		
		60			67			80	3.0	960		
190	363.200	95	220	358.488	112	265	379.733	127	4.9	1740	355	D36
		79			93			106	4.1	1450		
		63			74			84	3.2	1150		
		53			62			70	2.7	960		
190	395.831	87				265	413.850	117	4.4	1740	400	D40
		73						97	3.6	1450		
		58						77	2.9	1150		
		48						64	2.4	960		

B4 (iN=90-400)

Code	i_N	n_1 (r/min)	n_{2N} (r/min)	B419			B420			B421			B422		
				T_{2N} (kN・m)	i_{ex}	P_{1N} (kW)	T_{2N} (kN・m)	i_{ex}	P_{1N} (kW)	T_{2N} (kN・m)	i_{ex}	P_{1N} (kW)	T_{2N} (kN・m)	i_{ex}	P_{1N} (kW)
C90	90	1740	19.3												
		1450	16.1												
		1150	12.8												
		960	10.7												
D10	100	1740	17.4	330	96.552	623*	380	96.402	718*	460	96.644	867*	520	94.100	1007*
		1450	14.5			519			598			723			839
		1150	11.5			412			475			573			665
		960	9.6			344			396			478			555
D11	112	1740	15.5	330	111.250	540*	380	109.256	634*	460	107.981	776*	520	106.647	888*
		1450	12.9			450			528			647			740
		1150	10.3			357			419			513			587
		960	8.6			298			350			428			490
D13	125	1740	13.9	330	125.409	479*	380	125.888	550*	460	121.724	689*	520	119.158	795*
		1450	11.6			400			458			574			663
		1150	9.2			317			363			455			526
		960	7.7			265			303			380			439
D14	140	1740	12.4	330	145.211	414*	380	141.910	488*	460	140.944	595*	520	134.324	705*
		1450	10.4			345			407			496			588
		1150	8.2			274			322			393			466
		960	6.9			228			269			328			389
D16	160	1740	10.9	330	157.059	383*	380	164.317	421*	460	152.444	550*	520	155.533	609*
		1450	9.1			319			351			458			508
		1150	7.2			253			278			363			403
		960	6.0			211			232			303			336
D18	180	1740	9.7	330	178.000	338*	380	177.724	390*	460	172.770	485*	520	168.223	563*
		1450	8.1			281			325			404			469
		1150	6.4			223			257			321			372
		960	5.3			186			215			268			311
D20	200	1740	8.7	330	195.800	307*	380	201.421	344*	460	190.047	441*	520	190.653	497*
		1450	7.3			256			286			368			414
		1150	5.8			203			227			291			328
		960	4.8			169			190			243			274
D22	224	1740	7.8	330	225.923	266*	380	221.563	312*	460	219.285	382*	520	209.718	452*
		1450	6.5			222			260			319			376
		1150	5.1			176			207			253			299
		960	4.3			147			172			211			249
D25	250	1740	7.0	330	244.750	246*	380	255.650	271*	460	237.558	353*	520	241.982	392*
		1450	5.8			205			226			294			326
		1150	4.6			162			179			233			259
		960	3.8			136			149			195			216
D28	280	1740	6.2	330	275.900	218*	380	276.954	250*	460	267.793	313*	520	262.148	361*
		1450	5.2			182			208			261			301
		1150	4.1			144			165			207			239
		960	3.4			120			138			173			199
D32	315	1740	5.5	330	316.444	190*	380	312.203	222*	460	307.146	273*	520	295.512	321*
		1450	4.6			158			185			227			267
		1150	3.7			126			147			180			212
		960	3.0			105			122			151			177
D36	355	1740	4.9	330	344.875	174*	380	358.082	193*	460	334.741	250*	520	338.938	280*
		1450	4.1			145			161			209			233
		1150	3.2			115			128			165			185
		960	2.7			96			107			138			154
D40	400	1740	4.4				380	390.253	177*	460	377.934	222*	520	369.390	256*
		1450	3.6						148			185			214
		1150	2.9						117			147			170
		960	2.4						98			122			142

卧式安装齿轮箱应采用强制润滑
* 敬请垂询

Forced lubricati on required on horizontal gearbox
* On request

B4 (iN=90-400)

B423			B424			B425			B426			n_{2N} (r/min)	n_1 (r/min)	i_N	Code
T_{2N} (kN・m)	i_{ex}	P_{1N} (kW)	T_{2N} (kN・m)	i_{ex}	P_{1N} (kW)	T_{2N} (kN・m)	i_{ex}	P_{1N} (kW)	T_{2N} (kN・m)	i_{ex}	P_{1N} (kW)				
640	83.212	*				860	87.435	*	1030	87.619	*	19.3	1740	90	C90
		1168						1493			1785	16.1	1450		
		926						1184			1416	12.8	1150		
		773						989			1182	10.7	960		
640	94.307	*	725	94.307	*	860	102.397	*	1030	102.612	*	17.4	1740	100	D10
		1030			1167			1275			1524	14.5	1450		
		817			926			1011			1209	11.5	1150		
		682			773			844			1009	9.6	960		
640	105.370	*	725	106.881	*	860	110.184	*	1030	110.416	*	15.5	1740	112	D11
		922			1030			1185			1416	12.9	1450		
		731			817			940			1123	10.3	1150		
		611			682			785			938	8.6	960		
640	118.781	*	725	119.420	*	860	124.207	*	1030	124.469	*	13.9	1740	125	D13
		818			922			1051			1256	11.6	1450		
		649			731			834			996	9.2	1150		
		542			610			696			832	7.7	960		
640	137.536	*	725	134.619	*	860	143.819	*	1030	144.122	*	12.4	1740	140	D14
		707			818			908			1085	10.4	1450		
		560			649			720			861	8.2	1150		
		468			541			601			718	6.9	960		
640	148.758	*	725	155.874	*	860	155.554	*	1030	155.881	*	10.9	1740	160	D16
		653			706			839			1003	9.1	1450		
		518			560			666			796	7.2	1150		
		432			468			556			664	6.0	960		
640	168.593	692	725	168.593	*	860	182.171	860	1030	182.554	1028	9.7	1740	180	D18
		576			653			717			857	8.1	1450		
		457			518			568			679	6.4	1150		
		382			432			475			567	5.3	960		
640	185.452	629	725	191.072	691	860	193.924	808	1030	194.332	966	8.7	1740	200	D20
		524			576			673			805	7.3	1450		
		416			457			534			638	5.8	1150		
		347			381			446			533	4.8	960		
640	213.983	545	725	210.179	628	860	223.758	700	1030	224.229	837	7.8	1740	224	D22
		454			524			584			697	6.5	1450		
		360			415			463			553	5.1	1150		
		301			347			386			462	4.3	960		
640	231.815	503	725	242.514	545	860	242.404	646	1030	242.915	773	7.0	1740	250	D25
		419			454			539			644	5.8	1450		
		332			360			427			511	4.6	1150		
		278			301			357			426	3.8	960		
640	261.319	446	725	262.724	503	860	273.256	573	1030	273.831	685	6.2	1740	280	D28
		372			419			478			571	5.2	1450		
		295			332			379			453	4.1	1150		
		246			277			316			378	3.4	960		
640	299.720	389	725	296.161	446	860	313.412	500	1030	314.072	598	5.5	1740	315	D32
		324			372			417			498	4.6	1450		
		257			295			330			395	3.7	1150		
		215			246			276			330	3.0	960		
640	326.648	357	725	339.683	389	860	341.570	459	1030	342.289	548	4.9	1740	355	D36
		297			324			382			457	4.1	1450		
		236			257			303			362	3.2	1150		
		197			215			253			302	2.7	960		
			725	370.202	357							4.4	1740	400	D40
					297							3.6	1450		
					236							2.9	1150		
					197							2.4	960		

卧式安装齿轮箱应采用强制润滑
* 敬请垂询

Forced lubricati on required on horizontal gearbox
* On request

8 额定热容量(kW)

H2 (kW)

8 Rated thermal capacity(kW)

H2 (kW)

Code	i N		H204				H205				H206				H207			
			960	1150	1450	1740	960	1150	1450	1740	960	1150	1450	1740	960	1150	1450	1740
B18	1.8	P_{GA}	69	63	61.5	52.5												
		P_{GB}	159	168	198	216												
		P_{GC}	144	151.5	175.5	189												
		P_{GD}	243	264	315	354												
B20	2	P_{GA}	72	66.8	66.6	57					89	60	52	*				
		P_{GB}	163.5	174	205.5	225					190	191	223	222				
		P_{GC}	145.3	153	177	190.7					198	204	233	232				
		P_{GD}	247.5	270	321	360					334	348	422	440				
B22	2.24	P_{GA}	69	64.5	66	58.5					77	63	58	*				
		P_{GB}	156	166.5	198	217.5					193	197	231	232				
		P_{GC}	138	145.5	168	183					197	204	232	236				
		P_{GD}	232.5	255	303	342					334	359	422	445				
B25	2.5	P_{GA}	67.5	64.5	67.5	61.5					76	65	60	*				
		P_{GB}	151.5	163.5	193.5	214.5					188	195	229	245				
		P_{GC}	130.5	139.5	162	175.5					189	196	227	241				
		P_{GD}	225	246	294	331.5					319	346	409	454				
B28	2.8	P_{GA}	64.5	63	66	61.5					79	71	70	*				
		P_{GB}	143.55	154.5	184.5	204					191	200	238	257				
		P_{GC}	123	129	151.5	165					190	198	228	246				
		P_{GD}	208.5	229.5	273	310.5					319	346	413	461				
B32	3.15	P_{GA}	63	61.5	64.5	61.5					79	73	72	*				
		P_{GB}	137.55	150	177	198					187	200	235	256				
		P_{GC}	117	123	144	156					181	190	221	237				
		P_{GD}	198	217.5	261	295.5					306	334	397	446				
B36	3.55	P_{GA}	61.5	60	63	61.5					78	74	73	*				
		P_{GB}	131.4	143.7	169.5	190.2					181	194	229	252				
		P_{GC}	112.5	120	139.3	151.5					173	182	213	229				
		P_{GD}	189	208.5	249	283.1					294	322	383	431				
B40	4	P_{GA}	58.5	57	60.6	60.7					73	71	72	*				
		P_{GB}	124.4	136.35	162	180					170	184	217	240				
		P_{GC}	105	112.5	129	141					158	168	196	212				
		P_{GD}	177	195	232.5	265.2					271	298	354	400				
B45	4.5	P_{GA}	54	52.5	55.7	55.1					71	68	71	*				
		P_{GB}	113.55	124.65	148.35	165					162	176	208	232				
		P_{GC}	94.5	100.5	117	129					150	160	185	200				
		P_{GD}	160.5	177	211.5	240					256	281	335	379				
B50	5	P_{GA}	51.1	51.2	54.2	54.7					71	68	71	*				
		P_{GB}	108.15	118.95	141.6	157.1					157	172	203	225				
		P_{GC}	88.5	94.5	111	121.5					148	157	184	199				
		P_{GD}	150	166.5	198	226.7					250	275	327	372				
B56	5.6	P_{GA}	49.5	51	54	53.8					67	66	68	*				
		P_{GB}	105.3	116.1	138.2	154.5					149	163	195	216				
		P_{GC}	85.5	91.5	108	117					137	146	170	185				
		P_{GD}	146.1	160.5	192	219					233	257	306	348				

* 敬请垂询

* On request

H208				H209				H210				H211				H212					i N	Code
960	1150	1450	1740	960	1150	1450	1740	960	1150	1450	1740	960	1150	1450	1740	960	1150	1450	1740			
																				P_{GA}	1.8	B18
																				P_{GB}		
																				P_{GC}		
																				P_{GD}		
																				P_{GA}	2	B20
																				P_{GB}		
																				P_{GC}		
																				P_{GD}		
108	77	*	*	93	*	*	*					107	*	*	*					P_{GA}	2.24	B22
315	309	357	347	476	485	567	597					581	493	552	472					P_{GB}		
353	355	408	413	564	581	669	707					719	686	770	756					P_{GC}		
597	635	748	803	938	1008	1194	1318					1227	1246	1450	1489					P_{GD}		
107	79	*	*	95	*	*	*					109	*	*	*					P_{GA}	2.5	B25
305	301	352	354	459	476	560	599					586	516	584	526					P_{GB}		
331	336	387	401	529	550	634	676					699	677	764	761					P_{GC}		
564	602	712	776	884	956	1134	1260					1201	1233	1441	1500					P_{GD}		
106	83	*	*	96	*	*	*					116	*	*	*					P_{GA}	2.8	B28
296	297	348	362	436	459	541	583					579	529	605	569					P_{GB}		
315	321	370	389	494	516	599	641					667	655	743	751					P_{GC}		
539	577	683	750	828	900	1068	1194					1155	1198	1404	1482					P_{GD}		
107	91	*	*	97	*	*	*					125	*	*	*					P_{GA}	3.15	B32
287	295	347	369	427	452	534	581					564	541	624	620					P_{GB}		
296	307	355	377	480	501	581	627					618	620	708	730					P_{GC}		
510	551	653	723	796	868	1031	1157					1075	1133	1333	1436					P_{GD}		
107	95	*	*	98	*	*	*					179	*	*	*	141	*	*	*	P_{GA}	3.55	B36
280	292	344	370	413	441	522	571					547	542	631	646	556	467	522	465	P_{GB}		
282	295	340	364	452	474	550	593					582	591	679	710	800	761	853	797	P_{GC}		
486	528	627	699	756	826	984	1106					1014	1078	1273	1389	1314	1329	1549	1517	P_{GD}		
106	96	*	*	99	*	*	*					130	*	*	*	148	*	*	*	P_{GA}	4	B40
270	285	336	365	387	415	492	541					555	561	657	688	550	478	541	480	P_{GB}		
266	280	324	348	413	438	508	550					578	593	684	720	764	737	831	824	P_{GC}		
462	504	599	672	695	761	907	1022					1011	1085	1284	1413	1264	1293	1509	1565	P_{GD}		
102	95	*	*	100	*	*	*					115	*	*	*	167	*	*	*	P_{GA}	4.5	B45
258	275	325	355	364	394	466	516					548	562	660	700	562	521	597	572	P_{GB}		
252	265	307	331	387	410	474	515					566	586	676	717	744	737	836	851	P_{GC}		
436	476	567	638	649	712	851	963					988	1064	1262	1397	1241	1293	1517	1614	P_{GD}		
105	98	*	*	101	*	*	*					120	*	*	*	177	*	*	*	P_{GA}	5	B50
261	280	331	364	350	380	450	499					520	542	637	684	557	538	623	623	P_{GB}		
249	265	306	331	369	392	457	495					525	546	631	673	710	713	814	842	P_{GC}		
435	475	566	639	621	683	814	922					917	993	1179	1313	1194	1260	1485	1604	P_{GD}		
103	100	*	*	103	*	*	*					122	*	*	*	179	*	*	*	P_{GA}	5.6	B56
253	272	324	357	324	352	418	464					486	512	605	654	535	530	618	634	P_{GB}		
244	258	300	325	333	354	410	446					479	501	579	622	653	664	762	797	P_{GC}		
423	464	552	625	560	616	735	833					839	911	1082	1211	1102	1173	1386	1513	P_{GD}		

H2 (kW)

Code	i N		H204				H205				H206				H207			
			960	1150	1450	1740	960	1150	1450	1740	960	1150	1450	1740	960	1150	1450	1740
B63	6.3	P_{GA}	46	42	41	35	57	46	41	*	74	50	43	*	77	57	*	*
		P_{GB}	106	112	132	144	143	146	172	181	158	159	186	185	221	220	256	263
		P_{GC}	96	101	117	126	152	157	181	191	165	170	194	193	244	249	286	298
		P_{GD}	162	176	210	236	256	276	327	361	278	290	352	367	417	445	525	574
B71	7.1	P_{GA}	48	44	44	38	59	50	46	*	64	53	48	*	76	60	*	*
		P_{GB}	109	116	137	150	146	151	177	189	161	164	193	194	214	215	252	262
		P_{GC}	97	102	118	127	151	157	181	193	164	170	194	197	230	235	270	284
		P_{GD}	165	180	214	240	256	276	327	363	278	299	352	371	394	422	499	548
B80	8	P_{GA}	46	43	44	39	58	51	48	*	63	54	50	*	76	62	55	*
		P_{GB}	104	111	132	145	142	149	175	188	157	162	191	204	208	212	249	262
		P_{GC}	92	97	112	122	146	151	175	187	158	163	189	201	218	225	258	274
		P_{GD}	155	170	202	228	245	266	316	352	266	288	341	379	376	404	479	529
B90	9	P_{GA}	45	43	45	41	58	52	51	43	66	59	58	46	76	66	62	*
		P_{GB}	101	109	129	143	139	147	174	189	159	167	198	214	202	210	248	266
		P_{GC}	87	93	108	117	139	146	169	182	158	165	190	205	207	215	249	266
		P_{GD}	150	164	196	221	234	255	303	340	266	289	344	384	357	386	458	510
C10	10	P_{GA}	43	42	44	41	*	52	52	46	66	61	60	52	75	68	66	54
		P_{GB}	95.7	103	123	136	131	140	165	181	156	166	196	214	193	204	241	261
		P_{GC}	82	86	101	110	128	135	157	169	151	158	184	198	194	204	236	254
		P_{GD}	139	153	182	207	217	237	282	318	255	278	331	372	337	367	436	489
C11	11.2	P_{GA}	42	41	43	41	54	51	52	47	65	61	61	55	77	71	71	61
		P_{GB}	91.7	100	118	132	126	135	160	177	151	161	191	210	196	208	246	269
		P_{GC}	78	82	96	104	121	127	148	160	144	152	177	191	193	203	235	254
		P_{GD}	132	145	174	197	205	225	268	303	245	268	319	359	336	366	436	490
C13	12.5	P_{GA}	41	40	42	41	54	51	53	49	61	59	60	55	77	72	73	65
		P_{GB}	87.6	95.8	113	127	123	133	157	174	142	153	181	200	191	204	242	266
		P_{GC}	75	80	93	101	119	126	146	159	132	140	163	177	189	199	231	250
		P_{GD}	126	139	166	189	201	220	263	297	226	248	295	333	327	357	425	480
C14	14	P_{GA}	39	38	40	40	51	49	51	48	59	57	59	55	71	68	69	64
		P_{GB}	82.9	90.9	108	120	116	126	150	166	135	147	174	193	175	189	224	247
		P_{GC}	70	75	86	94	110	118	137	149	125	133	154	167	169	178	207	225
		P_{GD}	118	130	155	177	186	204	243	276	213	234	279	316	294	322	384	434
C16	16	P_{GA}	36	35	37	37	48	47	49	47	59	57	59	56	67	65	67	63
		P_{GB}	75.7	83.1	98.9	110	108	118	140	155	131	143	169	188	163	177	210	232
		P_{GC}	63	67	78	86	101	108	126	137	123	131	153	166	155	165	191	208
		P_{GD}	107	118	141	160	171	189	225	256	208	229	273	310	269	295	352	399
C18	18	P_{GA}	34	34	36	36	46	46	48	46	56	55	57	55	65	63	66	63
		P_{GB}	72.1	79.3	94.4	105	103	113	134	150	124	136	162	180	157	170	202	225
		P_{GC}	59	63	74	81	95	102	118	129	114	122	142	154	148	157	183	199
		P_{GD}	100	111	132	151	162	179	213	242	194	214	255	290	257	283	338	383
C20	20	P_{GA}	33	34	36	36	43	43	45	44	52	52	54	53	61	59	62	60
		P_{GB}	70.2	77.4	92.1	103	96.8	106	126	140	115	126	150	168	145	158	188	210
		P_{GC}	57	61	72	78	89	94	110	120	105	112	130	142	135	144	167	182
		P_{GD}	97.4	107	128	146	150	166	198	225	179	197	235	268	236	260	310	352
C22	22.4	P_{GA}					40	40	42	41	50	50	52	51	58	57	60	58
		P_{GB}					89.4	98	116	130	111	121	144	161	139	152	181	202
		P_{GC}					81	86	100	109	99	106	124	135	129	138	160	174
		P_{GD}					137	151	181	205	169	187	223	253	224	247	295	335

* 敬请垂询 * On request

H2 (kW)

H208				H209				H210				H211				H212					i N	Code
960	1150	1450	1740	960	1150	1450	1740	960	1150	1450	1740	960	1150	1450	1740	960	1150	1450	1740			
86	61	*	*	99	*	*	*	100	*	*	*	114	*	*	*	121	*	*	*	P_{GA}	6.3	B63
250	245	283	275	293	279	322	319	304	286	328	324	450	382	428	366	510	412	456	414	P_{GB}		
280	282	324	328	380	380	434	446	422	420	477	486	557	532	597	586	762	714	797	715	P_{GC}		
474	504	594	637	626	658	774	832	689	718	844	896	951	966	1124	1154	1243	1243	1443	1365	P_{GD}		
85	63	*	*	99	*	*	*	101	*	*	*	123	*	*	*	131	*	*	*	P_{GA}	7.1	B71
242	239	279	281	286	278	323	325	297	285	329	328	454	400	453	408	515	432	483	431	P_{GB}		
263	267	307	318	358	361	413	429	397	398	454	470	542	525	592	590	741	705	790	738	P_{GC}		
448	478	565	616	589	624	735	797	648	681	802	866	931	956	1117	1163	1217	1231	1434	1405	P_{GD}		
84	66	*	*	100	75	*	*	102	*	*	*	129	*	*	*	137	*	*	*	P_{GA}	8	B80
235	236	276	287	279	276	322	330	290	283	328	332	449	410	469	441	509	443	501	444	P_{GB}		
250	255	294	309	340	346	397	415	378	382	436	454	517	508	576	582	707	682	769	763	P_{GC}		
428	458	542	595	562	599	707	772	618	654	772	837	895	929	1088	1149	1170	1197	1397	1449	P_{GD}		
85	72	66	*	102	83	73	*	105	83	*	*	136	*	*	*	155	*	*	*	P_{GA}	9	B90
228	234	275	293	272	277	324	341	283	285	333	347	437	419	484	481	520	482	553	530	P_{GB}		
235	244	282	299	322	332	382	404	354	362	417	438	479	481	549	566	689	682	774	788	P_{GC}		
405	437	518	574	536	576	682	753	582	622	736	809	833	878	1033	1113	1149	1197	1405	1494	P_{GD}		
85	75	72	55	101	87	82	*	106	88	81	*	139	103	*	*	164	*	*	*	P_{GA}	10	C10
222	232	273	294	262	272	320	342	278	285	335	355	424	420	489	501	516	498	577	577	P_{GB}		
224	234	270	289	302	314	362	386	338	349	402	427	451	458	526	550	657	660	754	780	P_{GC}		
386	419	498	555	505	546	648	720	556	599	710	787	786	836	987	1077	1106	1167	1375	1485	P_{GD}		
84	76	75	62	99	88	85	67	105	92	88	*	147	117	101	*	166	122	*	*	P_{GA}	11.2	C11
214	226	267	290	249	262	309	333	270	281	331	355	430	435	509	533	495	491	572	587	P_{GB}		
211	222	257	276	282	295	342	366	318	331	383	410	448	460	530	558	605	615	706	738	P_{GC}		
367	400	475	533	473	514	610	682	528	572	679	756	784	841	995	1095	1020	1086	1283	1401	P_{GD}		
81	75	75	65	99	89	88	74	104	93	90	74	151	127	115	*	165	131	*	*	P_{GA}	12.5	C13
205	218	258	282	244	258	305	332	259	273	322	348	425	436	512	543	475	480	562	587	P_{GB}		
200	210	244	263	274	286	332	358	300	314	363	390	439	454	524	556	568	582	670	706	P_{GC}		
346	378	450	506	455	496	589	661	498	542	644	720	766	825	978	1083	960	1029	1218	1340	P_{GD}		
83	78	79	71	97	90	90	80	101	93	92	79	147	128	121	*	172	144	130	*	P_{GA}	14	C14
207	222	263	289	236	252	298	326	247	262	310	338	403	420	494	530	483	496	583	618	P_{GB}		
198	210	243	263	258	271	314	339	279	294	340	366	407	423	489	522	564	583	673	714	P_{GC}		
345	377	449	507	432	472	562	632	465	507	603	677	711	770	914	1018	958	1032	1223	1355	P_{GD}		
82	79	81	74	92	87	88	80	99	93	94	83	141	126	122	99	175	152	144	*	P_{GA}	16	C16
201	216	257	283	221	237	281	309	240	256	303	333	377	397	469	507	476	496	583	625	P_{GB}		
194	205	238	258	236	250	290	314	271	286	331	358	371	388	449	482	550	573	662	706	P_{GC}		
336	368	438	496	397	435	518	584	449	491	584	658	650	706	839	939	932	1009	1197	1333	P_{GD}		
76	74	76	72	88	84	86	80	97	93	94	87	133	122	122	104	170	153	149	121	P_{GA}	18	C18
184	200	237	263	208	225	266	295	231	249	296	326	352	375	443	483	450	474	560	606	P_{GB}		
174	185	214	234	221	234	271	294	255	270	314	339	346	364	422	454	508	531	615	660	P_{GC}		
301	331	395	447	371	407	486	550	425	465	555	627	609	664	790	887	864	938	1115	1249	P_{GD}		
72	70	73	70	85	83	85	80	93	88	91	85	129	121	121	106	161	146	145	122	P_{GA}	20	C20
172	187	222	246	200	217	257	285	217	235	278	308	339	362	428	469	419	444	525	571	P_{GB}		
159	170	198	214	211	224	261	283	234	249	290	314	326	344	399	431	462	485	562	604	P_{GC}		
276	304	363	411	355	390	465	527	392	430	512	580	575	628	747	842	789	856	1019	1143	P_{GD}		
69	67	70	67	78	76	79	74	87	84	86	80	121	113	113	100	149	136	135	115	P_{GA}	22.4	C22
165	179	213	237	185	201	239	265	203	220	261	289	314	336	397	436	390	414	489	533	P_{GB}		
152	162	188	205	190	202	234	255	218	232	270	293	297	314	363	393	432	454	526	566	P_{GC}		
263	290	346	392	320	352	420	476	366	401	478	541	524	573	682	768	736	802	954	1071	P_{GD}		

* 敬请垂询 * On request

H2 (kW)

Code	iN		H213				H214				H215			
			960	1150	1450	1740	960	1150	1450	1740	960	1150	1450	1740
B32	3.15	PGA					*	*	*	*				
		PGB					687	*	*	*				
		PGC					1516	1420	1571	1577				
		PGD					1990	1992	2275	2376				
B36	3.55	PGA					*	*	*	*				
		PGB					606	*	*	*				
		PGC					1469	1421	1529	1520				
		PGD					1933	1981	2206	2292				
B40	4	PGA					*	*	*	*				
		PGB					608	*	*	*				
		PGC					1400	1384	1458	1541				
		PGD					1861	1939	2106	2320				
B45	4.5	PGA					*	*	*	*				
		PGB					698	*	*	*				
		PGC					1336	1339	1464	1430				
		PGD					1778	1873	2113	2156				
B50	5	PGA					*	*	*	*				
		PGB					678	*	*	*				
		PGC					1255	1273	1350	1352				
		PGD					1681	1784	1951	2038				
B56	5.6	PGA					*	*	*	*				
		PGB					691	*	*	*				
		PGC					1244	1274	1268	1208				
		PGD					1670	1787	1831	1823				
B63	6.3	PGA	*	*	*	*	*	*	*	*	*	*	*	*
		PGB	579	415	442	*	632	486	523	376	563	*	*	*
		PGC	961	806	958	882	1031	960	928	942	1147	954	1014	822
		PGD	1553	1515	1793	1678	1690	1695	1736	1825	1782	1628	1824	1562
B71	7.1	PGA	*	*	*	*	*	*	*	*	*	*	*	*
		PGB	558	452	493	357	650	520	551	386	591	344	338	*
		PGC	930	860	954	902	1021	952	1002	1008	1114	957	1031	882
		PGD	1510	1497	1728	1710	1678	1682	1827	1906	1746	1636	1851	1666
B80	8	PGA	*	*	*	*	*	*	*	*	*	*	*	*
		PGB	591	484	537	436	656	526	580	453	613	407	422	*
		PGC	888	838	937	907	1010	946	1055	1013	1078	957	1045	935
		PGD	1455	1465	1700	1722	1658	1660	1923	1931	1696	1629	1860	1749
B90	9	PGA	166	*	*	*	180	*	*	*	*	*	*	*
		PGB	594	529	600	547	672	589	666	595	635	495	541	402
		PGC	844	821	927	928	979	947	1068	1062	3434	959	1066	1012
		PGD	1395	1436	1679	1755	1611	1651	1927	2003	1644	1635	1889	1877
C10	10	PGA	178	*	*	*	199	*	*	*	170	*	*	*
		PGB	587	549	631	611	673	624	715	683	640	545	612	526
		PGC	799	793	902	922	934	922	1047	1065	979	938	1053	1035
		PGD	1326	1386	1628	1736	1551	1616	1896	2013	1571	1598	1861	1913
C11	11.2	PGA	192	*	*	*	210	*	*	*	185	*	*	*
		PGB	601	582	674	675	665	638	738	733	632	569	648	600
		PGC	789	794	908	940	890	893	1019	1051	918	898	1015	1021
		PGD	1319	1393	1642	1775	1482	1561	1838	1980	1485	1535	1796	1886
C13	12.5	PGA	192	142	*	*	214	*	*	*	200	*	*	*
		PGB	572	567	660	677	648	638	742	756	637	596	685	662
		PGC	725	737	845	884	837	849	972	1014	902	894	1018	1038
		PGD	1212	1289	1523	1662	1401	1487	1755	1910	1459	1524	1790	1908
C14	14	PGA	191	152	*	*	226	176	*	*	204	*	*	*
		PGB	547	553	647	676	659	663	774	805	614	593	686	686
		PGC	672	690	793	836	830	850	976	1027	839	844	964	997
		PGD	1131	1211	1434	1578	1392	1489	1761	1933	1365	1440	1697	1832
C16	16	PGA	180	150	136	*	224	184	164	*	214	157	*	*
		PGB	501	514	603	639	626	640	751	792	617	610	710	727
		PGC	595	615	710	753	758	782	900	954	822	834	957	999
		PGD	1007	1085	1286	1424	1276	1372	1626	1797	1341	1426	1684	1836
C18	18	PGA	186	162	154	*	220	190	178	*	211	167	145	*
		PGB	506	528	621	667	598	621	731	782	583	590	690	722
		PGC	598	622	719	768	705	732	846	902	758	778	895	944
		PGD	1009	1093	1297	1446	1186	1286	1526	1698	1244	1333	1578	1736
C20	20	PGA					203	179	172	133				
		PGB					543	569	670	722				
		PGC					624	651	753	806				
		PGD					1056	1145	1360	1519				

* 敬请垂询

H2 (kW)

H216				H217				H218					iN	Code
960	1150	1450	1740	960	1150	1450	1740	960	1150	1450	1740			
*	*	*	*									PGA	3.15	B32
764	*	*	*									PGB		
1768	1245	1375	1104									PGC		
2215	1724	1951	1715									PGD		
*	*	*	*					*	*	*	*	PGA	3.55	B36
707	*	*	*					947	*	*	*	PGB		
1738	1281	1436	1189					1994	1502	1528	1582	PGC		
2172	1754	2068	1808					2629	2145	2280	2479	PGD		
*	*	*	*					*	*	*	*	PGA	4	B40
744	*	*	*					996	*	*	*	PGB		
1688	1289	1465	1282					1933	1517	1567	1711	PGC		
2126	1765	2101	1933					2572	2163	2325	2660	PGD		
*	*	*	*					*	*	*	*	PGA	4.5	B45
736	*	*	*					1016	*	*	*	PGB		
1639	1316	1525	1426					1864	1503	1568	1770	PGC		
2083	1796	2167	2123					2484	2134	2309	2726	PGD		
*	*	*	*					*	*	*	*	PGA	5	B50
702	*	*	*					1013	*	*	*	PGB		
1564	1297	1521	1480					1764	1451	1525	1758	PGC		
2009	1776	2160	2199					2358	2057	2237	2696	PGD		
*	*	*	*	*	*	*	*	*	*	*	*	PGA	5.6	B56
703	*	*	*	844	*	*	*	1032	*	*	*	PGB		
1484	1260	1489	1485	1603	1361	1609	1604	1717	1438	1520	1785	PGC		
1913	1720	2104	2193	2066	1857	2273	2369	2305	2038	2225	2730	PGD		
*	*	*	*	*	*	*	*	*	*	*	*	PGA	6.3	B63
553	*	*	*	625	*	*	*	633	*	*	*	PGB		
1178	949	1000	803	1389	1088	1128	816	1381	1062	1106	642	PGC		
1846	1642	1774	1559	2240	1954	2151	1661	2248	1940	1823	1568	PGD		
*	*	*	*	*	*	*	*	*	*	*	*	PGA	7.1	B71
589	*	*	*	683	*	*	*	659	*	*	*	PGB		
1158	976	1044	865	1351	1104	1166	918	1390	1106	1154	864	PGC		
1810	1670	1880	1644	2186	1971	2199	1832	2260	1997	2009	1759	PGD		
*	*	*	*	*	*	*	*	*	*	*	*	PGA	8	B80
620	386	390	*	733	*	*	*	719	*	*	*	PGB		
1126	982	1066	932	1319	1122	1206	1015	1354	1127	1200	975	PGC		
1772	1681	1910	1757	2154	2003	2261	2006	2203	2015	2260	1941	PGD		
*	*	*	*	*	*	*	*	*	*	*	*	PGA	9	B90
655	490	530	363	786	552	584	*	789	523	542	*	PGB		
1093	1002	1109	1037	1289	1160	1274	1164	1330	1178	1286	1150	PGC		
1736	1710	1970	1930	2120	2059	2360	2262	2191	2103	2400	2254	PGD		
168	*	*	*	*	*	*	*	*	*	*	*	PGA	10	C10
668	554	617	510	812	645	710	547	830	635	691	495	PGB		
1042	988	1106	1076	1267	1157	1289	1233	1289	1190	1319	1244	PGC		
1674	1691	1964	1999	2053	2051	2374	2387	2143	2121	2447	2418	PGD		
189	*	*	*	195	*	*	*	190	*	*	*	PGA	11.2	C11
669	591	669	604	815	698	784	679	847	705	787	655	PGB		
990	960	1083	1080	1174	1126	1266	1246	1242	1179	1321	1287	PGC		
1594	1638	1913	1994	1958	1994	2323	2393	2070	2092	2431	2478	PGD		
200	*	*	*	221	*	*	*	213	*	*	*	PGA	12.5	C13
656	604	691	656	833	748	851	786	844	742	840	754	PGB		
931	918	1042	1057	1144	1117	1263	1268	1176	1138	1284	1278	PGC		
1506	1566	1836	1945	1914	1976	2311	2426	1965	2017	2355	2451	PGD		
214	*	*	*	233	*	*	*	239	*	*	*	PGA	14	C14
659	629	726	717	814	761	875	846	860	792	906	861	PGB		
910	910	1038	1069	1071	1062	1209	1234	1145	1128	1280	1298	PGC		
1482	1557	1832	1969	1802	1883	2211	2358	1921	1998	2342	2482	PGD		
216	*	*	*	238	*	*	*	248	*	*	*	PGA	16	C16
634	620	721	731	782	754	873	872	837	797	919	905	PGB		
847	857	981	1020	996	1001	1143	1182	1073	1073	1222	1257	PGC		
1381	1463	1726	1875	1680	1772	2088	2253	1810	1901	2236	2401	PGD		
228	176	*	*	248	184	*	*	169	*	*	*	PGA	18	C18
638	640	748	777	768	762	888	912	805	790	919	934	PGB		
830	849	975	1026	951	968	1110	1161	994	1008	1154	1202	PGC		
1359	1453	1718	1885	1606	1710	2020	2206	1689	1792	2114	2299	PGD		
								258	196	*	*	PGA	20	C20
								787	785	915	944	PGB		
								945	963	1106	1159	PGC		
								1602	1708	2019	2209	PGD		

* On request

H2 (kW) H2 (kW)

Code	i_N		H219				H220				H221				H222			
			960	1150	1450	1740	960	1150	1450	1740	960	1150	1450	1740	960	1150	1450	1740
B80	8	PGA	*	*	*	*					*	*	*	*				
B90	9	PGA	*	*	*	*	*	*	*	*	*	*	*	*	*	*	*	*
C10	10	PGA	*	*	*	*	*	*	*	*	*	*	*	*	*	*	*	*
C11	11.2	PGA	*	*	*	*	*	*	*	*	*	*	*	*	*	*	*	*
C13	12.5	PGA	301	*	*	*	289	*	*	*	*	*	*	*	*	*	*	*
C14	14	PGA	328	*	*	*	333	*	*	*	*	*	*	*	*	*	*	*
C16	16	PGA	341	*	*	*	354	*	*	*	336	*	*	*	*	*	*	*
C18	18	PGA	362	*	*	*	368	*	*	*	367	*	*	*	352	*	*	*
C20	20	PGA					378	*	*	*					372	*	*	*

* 敬请垂询 * On request

H223				H224				H225				H226					i_N	Code
960	1150	1450	1740	960	1150	1450	1740	960	1150	1450	1740	960	1150	1450	1740			
*	*	*	*													PGA	8	B80
*	*	*	*	*	*	*	*									PGA	9	B90
*	*	*	*	*	*	*	*	*	*	*	*	*	*	*	*	PGA	10	C10
*	*	*	*	*	*	*	*	*	*	*	*	*	*	*	*	PGA	11.2	C11
*	*	*	*	*	*	*	*	*	*	*	*	*	*	*	*	PGA	12.5	C13
*	*	*	*	*	*	*	*	*	*	*	*	*	*	*	*	PGA	14	C14
*	*	*	*	*	*	*	*	*	*	*	*	*	*	*	*	PGA	16	C16
*	*	*	*	*	*	*	*	*	*	*	*	*	*	*	*	PGA	18	C18
				*	*	*	*									PGA	20	C20

* 敬请垂询 * On request

H3 (kW)

Code	iN		H305				H306				H307				H308			
			960	1150	1450	1740	960	1150	1450	1740	960	1150	1450	1740	960	1150	1450	1740
C16	16	P_{GA}	58.3	57.2	59.4	58.4	68.5	65.6	68.7	67.5	70.8	68.3	70.7	68.1	75.6	71.8	73.8	69.9
		P_{GB}	85.3	90.4	105	114	99.3	105	123	136	102	110	130	139	112	121	137	151
		P_{GC}	103	117	130	144	122	135	156	166	142	147	170	185	149	158	186	197
		P_{GD}	157	170	199	224	181	194	236	255	205	221	261	292	212	227	268	301
C18	18	P_{GA}	56.1	55.3	57.6	57	65.8	63.6	66.7	65.8	71.4	69.4	72	69.9	76.2	72.9	75.2	71.9
		P_{GB}	82.1	87.4	102	111	95.5	101	118	131	104	112	132	141	113	122	138	152
		P_{GC}	98	110	122	136	116	127	146	156	140	146	169	184	146	156	184	195
		P_{GD}	149	161	190	213	171	185	223	243	204	221	261	292	211	227	268	301
C20	20	P_{GA}	53.9	53.4	55.9	55.6	63.3	61.6	64.7	64.3	72.1	70.4	73.4	71.8	76.7	74	76.7	74
		P_{GB}	79.1	84.6	98.7	107	91.8	98	114	127	106	114	134	144	114	123	140	154
		P_{GC}	93	102	116	128	110	120	138	148	138	146	168	183	145	154	181	194
		P_{GD}	140	153	180	202	162	176	211	232	203	221	261	292	210	227	268	301
C22	22.4	P_{GA}	51.9	51.6	54.2	54.2	60.8	59.6	62.8	62.7	72.8	71.5	74.7	73.7	77.3	75.1	78.2	76.1
		P_{GB}	76.2	81.8	95.5	104	88.3	94.6	111	122	108	116	136	147	115	124	142	156
		P_{GC}	89	96	110	121	103	113	130	140	137	145	167	182	143	153	178	192
		P_{GD}	132	145	171	192	153	167	200	221	202	221	261	292	209	227	268	301
C25	25	P_{GA}	49.9	49.8	52.5	52.9	58.5	57.8	61	61.2	73.5	72.6	76.1	75.6	77.9	76.3	79.7	78.3
		P_{GB}	73.4	79.1	92.4	101	85	91.4	107	117	110	118	138	150	116	125	144	158
		P_{GC}	84	90	104	114	98	106	122	132	135	144	166	182	142	151	176	190
		P_{GD}	125	138	163	183	145	159	190	210	201	221	261	292	208	227	268	301
C28	28	P_{GA}	48	48.1	50.9	51.6	56.2	56	59.2	59.7	74.2	73.7	77.5	77.6	78.5	77.4	81.2	80.6
		P_{GB}	70.7	76.5	89.4	97.9	81.7	88.3	103	113	112	120	140	153	117	126	146	160
		P_{GC}	80	85	98	108	*	*	*	*	134	143	166	181	140	150	174	189
		P_{GD}	118	131	155	174	*	*	*	*	200	221	261	292	207	227	268	301
C32	31.5	P_{GA}	46.7	47.1	49.9	50.9	54	54.2	57.4	58.3	71.4	71.3	75.3	76	79.1	78.6	82.8	82.9
		P_{GB}	68.5	74.4	86.9	95.5	78.6	85.3	99.6	109	107	115	135	147	118	127	148	162
		P_{GC}	76	82	94	104	*	*	*	*	*	*	*	*	*	*	*	*
		P_{GD}	114	126	149	168	*	*	*	*	*	*	*	*	*	*	*	*
C36	35.5	P_{GA}	45.2	45.7	48.6	49.8	51.9	52.5	55.7	56.9	69.4	69.7	73.9	75.1	79.7	79.8	84.4	85.3
		P_{GB}	66.2	72.2	84.3	92.9	75.6	82.4	96.2	105	104	113	132	145	119	128	150	164
		P_{GC}	73	79	90	99	82	88	102	112	121	130	150	165	137	146	169	186
		P_{GD}	109	121	143	161	123	137	161	182	183	202	239	268	205	227	268	301
C40	40	P_{GA}	42.7	43.3	46.1	47.3	50.4	51.1	54.3	55.7	66	66.5	70.6	72	76.6	76.9	81.4	82.7
		P_{GB}	62.3	68.1	79.5	87.7	73.3	80	93.4	102	98.9	107	125	138	113	123	144	158
		P_{GC}	68	73	84	93	*	*	*	*	*	*	*	*	*	*	*	*
		P_{GD}	101	112	133	149	*	*	*	*	*	*	*	*	*	*	*	*
C45	45	P_{GA}	40.8	41.5	44.2	45.5	48.7	49.4	52.5	53.9	63.6	64.2	68.2	69.7	74.3	74.7	79.2	80.6
		P_{GB}	59.6	65.2	76.1	84	70.7	77.3	90.2	99.5	95	103	120	132	110	120	140	154
		P_{GC}	64	69	80	87	76	81	94	103	107	115	134	146	124	133	154	169
		P_{GD}	96	106	126	141	113	125	148	166	162	180	212	239	186	206	243	273
C50	50	P_{GA}	39.6	40.4	43.2	44.7	46.1	47	50.1	51.9	60.1	61.2	65.2	67.3	70.9	71.9	76.6	78.7
		P_{GB}	57.5	63.2	73.8	81.7	66.7	73.2	85.5	94.6	89.6	98.2	114	126	104	114	133	147
		P_{GC}	62	67	77	85	*	*	*	*	*	*	*	*	*	*	*	*
		P_{GD}	92.8	103	122	137	*	*	*	*	*	*	*	*	*	*	*	*
C56	56	P_{GA}	37.6	38.5	41.2	42.9	44.3	45.3	48.5	50.4	57.5	58.7	62.7	65	68.4	69.7	74.4	77
		P_{GB}	54.5	60.1	70.1	77.7	63.9	70.4	82.2	91.1	85.2	93.7	109	121	100	110	129	143
		P_{GC}	58	63	72	80	*	*	*	*	*	*	*	*	*	*	*	*
		P_{GD}	86.7	96.9	114	129	99.7	111	131	148	143	160	188	212	166	185	218	246
C63	63	P_{GA}	35.5	36.4	39.1	40.8	42.7	43.9	47	49	53.7	55.1	59	61.5	64.7	66.4	71	73.9
		P_{GB}	51.2	56.6	66.1	73.4	61.4	67.9	79.2	88	79.4	87.6	102	113	95.1	105	122	135
		P_{GC}	54	58	67	74	*	*	*	*	*	*	*	*	*	*	*	*
		P_{GD}	80.6	90.2	106	120	*	*	*	*	*	*	*	*	*	*	*	*
C71	71	P_{GA}	35.1	36.1	38.7	40.4	40.5	41.6	44.6	46.6	52.1	53.5	57.3	59.8	61.6	63.2	67.7	70.5
		P_{GB}	50.6	56	65.3	72.6	58.1	64.3	75	83.3	76.7	84.8	98.9	109	90.4	99.8	116	129
		P_{GC}	53	58	66	73	*	*	*	*	*	*	*	*	*	*	*	*
		P_{GD}	79.7	89.2	105	118	*	*	*	*	*	*	*	*	*	*	*	*
C80	80	P_{GA}	33.3	34.3	36.8	38.4	38.2	39.2	42.1	44	50.9	52.3	56	58.5	57.6	59.1	63.3	66
		P_{GB}	47.9	53	61.9	68.8	54.5	60.3	70.3	78.2	74.9	82.8	96.6	107	84.1	92.9	108	120
		P_{GC}	49	54	62	68	*	*	*	*	*	*	*	*	*	*	*	*
		P_{GD}	74.2	83	97.9	110	*	*	*	*	*	*	*	*	*	*	*	*
C90	90	P_{GA}	32.9	33.9	36.3	38	37.8	38.9	41.8	43.6	48.1	49.5	53.1	55.4	55.7	57.2	61.4	64
		P_{GB}	47.3	52.4	61.1	67.9	54.1	59.8	69.8	77.6	70.7	78.3	94.3	101	81.1	89.7	104	116
		P_{GC}	48	52	60	66	*	*	*	*	*	*	*	*	*	*	*	*
		P_{GD}	72.3	81	95.5	107	*	*	*	*	*	*	*	*	*	*	*	*
D10	100	P_{GA}																
		P_{GB}																
		P_{GC}																
		P_{GD}																

* 敬请垂询　　* On request

H3 (kW)

H309				H310				H311				H312					iN	Code
960	1150	1450	1740	960	1150	1450	1740	960	1150	1450	1740	960	1150	1450	1740			
101	94.6	96.1	89.7	101	94.9	90.8	84.7	158	144	142	115	197	175	165	132	PGA	16	C16
160	164	191	197	164	167	200	210	265	261	305	306	316	302	361	359	PGB		
226	234	269	290	271	286	329	354	438	448	518	553	516	525	604	635	PGC		
332	353	421	463	392	424	504	554	622	650	777	844	724	752	889	962	PGD		
100	95.1	97.1	91.7	101	95.5	92.6	87.2	154	142	141	117	191	172	164	135	PGA	18	C18
158	163	190	198	161	166	198	209	256	254	297	301	305	295	351	353	PGB		
218	227	262	283	264	278	321	346	410	422	487	522	482	494	568	600	PGC		
322	344	410	452	382	414	491	541	587	617	736	802	682	713	843	916	PGD		
100	95.6	98	93.6	101	96	94.4	89.8	151	140	140	120	186	169	163	138	PGA	20	C20
156	162	189	199	159	165	196	208	247	247	290	297	294	288	342	348	PGB		
211	222	255	277	256	271	312	338	383	397	458	492	451	464	534	567	PGC		
312	336	399	442	372	403	479	529	553	585	698	762	644	677	801	873	PGD		
100	96.1	99	95.6	101	96.6	96.2	92.5	148	138	139	123	180	165	162	140	PGA	22.4	C22
154	161	188	200	157	164	194	207	238	241	282	293	284	282	333	342	PGB		
204	215	248	270	249	264	304	330	358	374	431	464	422	437	502	536	PGC		
302	327	388	431	362	393	467	517	522	555	661	725	607	642	760	831	PGD		
99.3	96.6	100	97.7	100	97.2	98.1	95.3	145	136	138	126	174	162	161	143	PGA	25	C25
152	160	187	201	155	163	192	206	230	235	275	289	274	275	325	337	PGB		
198	210	242	263	242	258	297	322	335	351	406	438	394	410	473	506	PGC		
293	319	378	421	352	384	455	505	492	527	626	689	572	610	721	792	PGD		
99	97.1	101	99.8	100	97.8	100	98.1	142	134	137	129	169	159	160	146	PGA	28	C28
150	159	186	202	153	162	190	205	222	229	268	285	264	269	316	332	PGB		
191	204	235	257	235	250	289	314	314	330	382	413	369	386	445	479	PGC		
284	311	368	411	342	374	443	493	464	500	593	655	540	579	685	755	PGD		
96.9	95.8	100	100	100	98.4	102	101	138	132	137	131	164	156	159	149	PGA	31.5	C32
146	157	183	199	151	365	432	482	215	225	263	281	255	263	308	327	PGB		
184	196	226	247	*	*	*	*	299	317	366	397	345	363	418	453	PGC		
273	300	355	397	*	*	*	*	443	481	570	632	509	549	650	719	PGD		
93.9	93.6	98.7	99.2	99.8	99	104	104	134	130	135	132	159	153	158	152	PGA	35.5	C36
142	153	178	195	149	160	186	203	208	220	257	277	246	257	300	322	PGB		
175	187	217	237	*	*	*	*	283	301	347	378	322	342	394	428	PGC		
262	289	342	383	*	*	*	*	422	460	544	606	480	521	617	685	PGD		
88.9	88.9	93.9	94.9	96.5	96.2	101	101	129	126	132	130	155	150	156	151	PGA	40	C40
134	145	170	186	145	156	182	199	199	212	248	268	238	251	293	315	PGB		
163	175	202	222	*	*	*	*	266	284	328	358	307	326	376	409	PGC		
244	270	319	357	*	*	*	*	397	434	514	573	457	497	589	655	PGD		
85.6	85.9	90.8	92	94	93.9	99.1	99.9	128	126	132	131	149	145	151	147	PGA	45	C45
128	139	162	178	141	152	177	194	199	212	247	268	229	242	283	305	PGB		
154	166	191	210	*	*	*	*	261	278	321	350	291	310	358	390	PGC		
232	256	303	340	*	*	*	*	389	427	505	563	434	474	561	624	PGD		
84.2	85.2	90.6	92.9	89.4	90.3	95.9	98	127	127	134	135	145	144	151	152	PGA	50	C50
126	137	160	177	133	145	169	186	195	210	246	269	222	238	278	303	PGB		
151	162	188	206	*	*	*	*	255	274	316	346	275	294	340	372	PGC		
225	250	295	332	*	*	*	*	381	421	497	558	411	452	534	598	PGD		
80.4	81.8	87.3	90.1	86.2	87.7	93.4	96.2	118	119	127	129	145	146	154	157	PGA	56	C56
120	131	153	169	128	140	164	181	181	197	230	253	221	240	280	307	PGB		
141	152	175	193	*	*	*	*	231	249	287	316	270	289	334	366	PGC		
212	236	278	314	*	*	*	*	345	383	452	508	403	446	527	592	PGD		
76.2	78	83.5	86.8	84.6	86.5	92.5	96	113	115	122	126	143	145	154	159	PGA	63	C63
112	124	145	160	124	137	160	177	171	188	219	242	216	236	276	304	PGB		
130	141	163	180	*	*	*	*	214	231	267	294	264	285	329	362	PGC		
197	220	259	293	*	*	*	*	321	357	421	475	395	439	518	584	PGD		
74.6	76.4	81.8	85.1	80.5	82.4	88.2	91.6	110	112	120	124	133	135	144	149	PGA	71	C71
110	122	142	158	119	131	153	170	166	182	213	235	200	219	256	283	PGB		
128	138	160	176	*	*	*	*	206	223	258	284	238	257	297	326	PGC		
191	214	252	285	*	*	*	*	309	345	407	458	357	398	469	529	PGD		
70.6	72.4	77.6	80.8	76.1	78	83.5	86.8	104	106	113	118	125	128	136	141	PGA	80	C80
104	114	134	148	111	123	143	159	156	172	201	222	188	207	241	267	PGB		
118	128	148	163	*	*	*	*	190	206	238	262	222	238	276	304	PGC		
179	200	236	266	*	*	*	*	286	319	377	425	332	370	437	492	PGD		
67.1	68.8	73.8	76.9	74.3	76.2	81.6	85	100	103	110	114	123	125	134	139	PGA	90	C90
98.8	109	127	141	108	119	140	155	151	166	194	215	183	201	235	260	PGB		
110	119	138	152	*	*	*	*	182	198	228	251	214	230	266	294	PGC		
166	186	219	247	*	*	*	*	275	307	362	409	321	358	422	476	PGD		
63.8	66	70.1	73.8	70.7	72.7	78	81.6	94.3	98	105	109	116	119	128	133	PGA	100	D10
94.2	104	121	135	103	114	133	148	143	158	184	204	173	191	223	247	PGB		
102	111	128	142	*	*	*	*	169	182	211	233	198	214	246	272	PGC		
155	174	204	230	*	*	*	*	254	285	336	380	297	332	392	442	PGD		

* 敬请垂询　　* On request

H3 (kW)

Code	iN		H313				H314				H315			
			960	1150	1450	1740	960	1150	1450	1740	960	1150	1450	1740
C14	14	PGA												
		PGB												
		PGC												
		PGD												
C16	16	PGA	218	185	188	120	235	212	183	*	264	201	185	*
		PGB	337	352	385	350	374	339	396	371	465	421	470	420
		PGC	500	539	595	629	570	588	680	721	801	846	945	962
		PGD	724	806	903	975	835	874	996	1082	1163	1174	1368	1402
C18	18	PGA	210	185	181	128	230	209	185	*	263	205	187	*
		PGB	324	336	370	354	366	337	394	374	452	411	467	427
		PGC	480	506	572	602	556	569	659	702	770	810	908	957
		PGD	696	743	868	926	803	843	971	1058	1128	1158	1325	1393
C20	20	PGA	198	173	171	137	228	206	186	137	260	208	192	*
		PGB	306	310	349	360	358	335	391	376	443	403	452	438
		PGC	453	486	540	581	531	554	633	674	748	774	880	914
		PGD	657	721	819	903	775	812	945	1024	1096	1103	1293	1362
C22	22.4	PGA	196	173	169	141	224	204	188	146	258	209	193	*
		PGB	303	295	346	352	346	328	385	380	432	393	463	446
		PGC	449	464	534	570	506	532	612	654	722	730	840	882
		PGD	650	681	811	881	741	779	908	998	1043	1059	1267	1350
C25	25	PGA	191	170	137	140	219	203	190	155	253	207	192	*
		PGB	294	288	338	345	337	326	382	387	420	385	456	439
		PGC	426	442	509	543	485	506	586	627	680	690	794	834
		PGD	617	647	771	839	709	748	884	962	986	1004	1201	1282
C28	28	PGA	186	170	169	148	214	193	191	165	254	216	206	*
		PGB	286	285	334	346	327	324	380	392	417	394	463	460
		PGC	400	417	480	515	469	487	561	601	656	671	773	818
		PGD	583	617	734	803	680	718	854	932	957	987	1179	1269
C32	31.5	PGA	184	171	173	157	211	194	196	176	252	222	217	179
		PGB	279	283	332	348	319	322	377	394	411	399	468	475
		PGC	384	402	464	500	445	465	536	577	626	646	744	794
		PGD	560	598	710	781	647	690	819	900	917	959	1143	1240
C36	35.5	PGA	180	171	175	164	206	194	198	184	244	222	222	194
		PGB	271	280	328	348	311	320	374	369	395	393	461	477
		PGC	365	385	444	481	418	440	507	549	580	604	696	746
		PGD	534	576	683	755	612	658	781	862	854	905	1075	1176
C40	40	PGA	174	167	172	164	201	192	197	186	237	219	221	199
		PGB	261	272	318	339	302	313	366	390	380	383	449	469
		PGC	345	364	420	456	399	422	486	527	546	571	658	710
		PGD	506	547	649	719	586	633	750	831	809	862	1024	1124
C45	45	PGA	167	161	166	159	194	186	192	183	237	220	223	203
		PGB	250	261	306	327	291	303	355	379	378	384	450	472
		PGC	324	343	396	430	380	402	463	502	535	561	647	698
		PGD	475	516	611	678	557	603	714	792	793	847	1006	1107
C50	50	PGA	166	164	171	170	190	187	195	193	241	232	240	231
		PGB	245	262	306	332	283	301	352	381	378	395	462	495
		PGC	315	337	388	424	358	382	441	481	530	561	647	703
		PGD	465	510	603	673	529	580	686	766	785	852	1009	1120
C56	56	PGA	161	161	170	171	183	183	192	194	232	228	239	236
		PGB	238	257	300	329	271	292	341	373	361	384	449	487
		PGC	298	320	369	404	337	361	417	456	494	526	607	663
		PGD	441	486	574	644	499	550	650	728	735	805	952	1063
C63	63	PGA	154	156	166	170	180	182	194	198	222	222	235	238
		PGB	226	247	288	317	265	289	338	372	343	371	434	475
		PGC	278	299	346	379	328	353	408	448	456	489	565	619
		PGD	411	456	538	606	486	540	637	716	681	753	889	998
C71	71	PGA	150	152	162	166	174	177	188	193	216	217	230	234
		PGB	219	239	279	308	255	279	325	359	333	361	422	463
		PGC	265	286	330	362	311	335	387	426	438	471	544	597
		PGD	393	436	515	580	461	512	605	681	655	725	857	962
C80	80	PGA	145	148	158	162	165	167	178	183	208	210	223	228
		PGB	213	233	272	300	241	264	308	340	320	348	406	447
		PGC	255	275	318	350	289	311	359	395	414	445	514	564
		PGD	378	420	496	559	429	478	564	635	620	688	812	912
C90	90	PGA	136	138	148	152	160	163	173	179	196	199	211	217
		PGB	199	218	255	282	233	256	298	330	301	328	383	422
		PGC	234	253	292	83	276	298	344	378	383	412	476	523
		PGD	348	388	458	516	409	455	537	605	573	637	752	846
D10	100	PGA	128	131	140	143	156	160	171	178	188	190	202	208
		PGB	193	210	248	276	227	251	293	325	290	318	374	401
		PGC	212	246	286	304	266	287	332	366	368	380	436	482
		PGD	327	367	436	462	394	441	520	587	543	600	702	806
D11	112	PGA									176	188	191	197
		PGB									281	309	360	390
		PGC									348	352	402	439
		PGD									512	561	653	749

* 敬请垂询 * On request

H3 (kW)

H316				H317				H318					iN	Code
960	1150	1450	1740	960	1150	1450	1740	960	1150	1450	1740			
				278	220	*	*					PGA	14	C14
				463	407	479	435					PGB		
				874	883	949	986					PGC		
				1223	1231	1402	1423					PGD		
271	201	176	*	276	218	*	*	271	170	*	*	PGA	16	C16
462	376	439	389	459	396	471	433	486	348	419	308	PGB		
821	827	929	999	838	840	907	958	797	850	902	930	PGC		
1221	1163	1392	1457	1174	1185	1362	1372	1179	1165	1354	1360	PGD		
270	204	178	*	273	215	*	*	274	179	*	*	PGA	18	C18
459	381	443	401	456	390	460	426	481	354	426	335	PGB		
793	791	902	972	797	802	886	930	776	819	880	909	PGC		
1189	1140	1365	1426	1123	1136	1306	1310	1136	1126	1314	1331	PGD		
269	208	181	*	271	207	*	*	275	188	*	*	PGA	20	C20
456	385	455	412	450	387	458	420	470	362	432	362	PGB		
767	778	877	942	757	762	855	887	766	786	860	890	PGC		
1148	1119	1325	1402	1058	1063	1250	1263	1106	1085	1296	1315	PGD		
268	210	183	*	270	206	180	*	280	197	*	*	PGA	22.4	C22
451	390	461	429	440	382	450	416	460	377	440	390	PGB		
746	756	864	914	722	721	828	861	748	752	847	870	PGC		
1096	1098	1296	1385	1029	1023	1228	1290	1077	1040	1257	1296	PGD		
265	212	193	*	263	203	180	*	276	207	*	*	PGA	25	C25
443	399	470	448	427	375	442	411	451	386	455	414	PGB		
730	737	847	888	681	682	783	816	725	720	828	858	PGC		
1055	1066	1277	1356	972	970	1164	1226	1033	1021	1227	1285	PGD		
264	221	207	*	265	215	198	*	274	217	196	*	PGA	28	C28
434	404	475	466	425	387	455	439	441	394	464	439	PGB		
688	700	806	851	655	662	762	801	683	687	790	826	PGC		
999	1024	1224	1312	942	956	1145	1219	981	987	1182	1252	PGD		
265	230	222	178	263	223	212	*	276	230	216	*	PGA	31.5	C32
432	415	487	490	418	394	463	459	440	408	480	470	PGB		
663	682	785	834	628	642	739	782	661	672	774	816	PGC		
969	1008	1202	1300	906	935	1116	1200	952	975	1165	1248	PGD		
264	237	235	201	255	226	221	184	274	239	232	187	PGA	35.5	C36
425	420	493	507	401	391	459	467	433	417	489	493	PGB		
634	658	758	812	580	599	690	736	631	650	748	796	PGC		
934	984	1171	1278	844	884	1052	1144	916	954	1137	1231	PGD		
253	231	232	205	247	223	221	190	264	235	231	194	PGA	40	C40
406	406	476	495	387	383	449	462	412	404	474	484	PGB		
587	612	706	758	548	570	656	702	584	605	697	744	PGC		
867	921	1094	1199	799	843	1003	1095	853	895	1066	1160	PGD		
245	226	227	204	246	224	224	196	254	229	227	194	PGA	45	C45
390	393	460	481	383	382	448	464	397	392	460	473	PGB		
554	579	668	718	536	558	643	690	551	572	658	706	PGC		
817	871	1034	1135	782	828	985	1077	804	848	1009	1101	PGD		
149	239	246	234	248	236	242	228	259	245	250	233	PGA	50	C50
393	410	479	512	381	394	462	491	399	410	480	508	PGB		
542	574	662	718	524	553	638	691	537	566	652	705	PGC		
805	872	1033	1146	771	832	987	1092	793	853	1012	1117	PGD		
250	245	256	252	240	234	243	237	258	250	260	252	PGA	56	C56
390	414	484	523	367	387	453	488	394	414	485	521	PGB		
535	570	658	718	491	522	602	656	528	560	646	703	PGC		
795	869	1028	1147	723	789	934	1040	777	846	1001	1114	PGD		
242	242	255	258	230	229	241	243	250	249	262	262	PGA	63	C63
375	405	473	517	349	375	439	479	378	406	474	517	PGB		
498	534	616	675	454	486	560	614	493	527	608	666	PGC		
746	824	973	1091	672	741	876	981	730	804	950	1064	PGD		
229	230	243	247	221	222	234	237	237	236	249	251	PGA	71	C71
353	382	447	490	334	361	422	462	357	385	450	492	PGB		
462	496	572	628	434	465	537	588	457	489	565	618	PGC		
690	764	902	1012	644	712	841	943	676	746	881	987	PGD		
222	224	237	242	213	214	227	230	228	228	241	244	PGA	80	C80
342	371	434	476	321	348	406	446	343	371	433	475	PGB		
444	477	550	605	410	440	508	557	437	469	541	594	PGC		
663	735	868	975	608	673	795	892	648	716	846	949	PGD		
215	217	234	236	201	203	215	219	219	220	233	237	PGA	90	C90
328	358	418	460	302	329	384	422	329	357	417	458	PGB		
419	450	521	572	379	407	470	516	413	444	512	562	PGC		
628	697	823	925	564	625	738	829	614	680	803	902	PGD		
203	207	221	229	192	194	205	210	208	212	226	233	PGA	100	D10
310	340	397	440	293	309	375	400	310	340	397	439	PGB		
387	418	483	532	360	378	443	481	382	412	476	524	PGC		
581	648	764	862	524	584	688	759	569	634	748	843	PGD		
192	197	211	218					197	202	215	228	PGA	112	D11
297	332	385	412					296	330	378	419	PGB		
378	402	454	492					367	380	452	490	PGC		
542	608	664	793					539	600	699	798	PGD		

* 敬请垂询 * On request

H3 (kW) H3 (kW)

Code	i_N		H319				H320				H321				H322			
			960	1150	1450	1740	960	1150	1450	1740	960	1150	1450	1740	960	1150	1450	1740
C16	16	PGA	341	*	*	*												
C18	18	PGA	362	*	*	*	368	*	*	*	367	*	*	*				
C20	20	PGA	361	264	*	*	378	*	*	*	373	*	*	*	372	*	*	*
C22	22.4	PGA	325	232	*	*	369	267	*	*	350	*	*	*	362	*	*	*
C25	25	PGA	323	234	*	*	333	235	*	*	363	*	*	*	343	*	*	*
C28	28	PGA	326	252	222	*	338	255	*	*	380	*	*	*	370	*	*	*
C32	31.5	PGA	327	267	246	*	341	274	249	*	394	276	*	*	389	*	*	*
C36	35.5	PGA	325	279	268	208	342	290	276	*	404	311	273	*	404	292	*	*
C40	40	PGA	317	279	272	223	336	293	283	227	401	322	293	*	407	310	269	*
C45	45	PGA	316	281	276	231	326	287	280	230	393	321	297	*	402	313	278	*
C50	50	PGA	320	300	304	280	332	309	313	285	410	365	360	303	410	356	344	274
C56	56	PGA	311	300	310	298	332	319	329	315	401	374	379	347	421	386	387	343
C63	63	PGA	295	293	307	307	324	320	336	334	393	382	397	386	413	398	411	394
C71	71	PGA	292	290	306	307	303	301	316	317	373	365	381	374	397	385	400	387
C80	80	PGA	277	277	292	295	299	299	315	317					377	368	384	376
C90	90	PGA					283	284	300	304								

* 敬请垂询 * On request

H323				H324				H325				H326					i_N	Code
960	1150	1450	1740	960	1150	1450	1740	960	1150	1450	1740	960	1150	1450	1740			
																PGA	16	C16
*	*	*	*					*	*	*	*	*	*	*	*	PGA	18	C18
*	*	*	*	*	*	*	*	*	*	*	*	*	*	*	*	PGA	20	C20
*	*	*	*	*	*	*	*	*	*	*	*	*	*	*	*	PGA	22.4	C22
*	*	*	*	*	*	*	*	*	*	*	*	*	*	*	*	PGA	25	C25
*	*	*	*	*	*	*	*	*	*	*	*	*	*	*	*	PGA	28	C28
*	*	*	*	*	*	*	*	*	*	*	*	*	*	*	*	PGA	31.5	C32
*	*	*	*	*	*	*	*	*	*	*	*	*	*	*	*	PGA	35.5	C36
*	*	*	*	*	*	*	*	*	*	*	*	*	*	*	*	PGA	40	C40
*	*	*	*	*	*	*	*	*	*	*	*	*	*	*	*	PGA	45	C45
*	*	*	*	*	*	*	*	*	*	*	*	*	*	*	*	PGA	50	C50
*	*	*	*	*	*	*	*	*	*	*	*	*	*	*	*	PGA	56	C56
*	*	*	*	*	*	*	*	*	*	*	*	*	*	*	*	PGA	63	C63
*	*	*	*	*	*	*	*	*	*	*	*	*	*	*	*	PGA	71	C71
				*	*	*	*	*	*	*	*	*	*	*	*	PGA	80	C80
																PGA	90	C90

* 敬请垂询 * On request

H4 (kW) H4 (kW)

Code	iN		H407				H408				H409			
			960	1150	1450	1740	960	1150	1450	1740	960	1150	1450	1740
C71	71	PGA	48.7	49.5	53.2	56.7	56.9	76.1	82.4	84.2	70.7	72.5	75	77.3
C80	80	PGA	47.1	48.7	51.1	54.8	55.2	56.9	78.6	82.4	67.6	70.7	72.5	75
C90	90	PGA	45.4	47.1	49.5	53.2	52.5	55.2	76.1	78.6	65.1	67.6	70.7	72.5
D10	100	PGA	43.6	45.4	48.7	51.1	50.5	52.5	56.9	76.1	60.8	65.1	67.6	70.7
D11	112	PGA	42	43.9	47.1	49.5	49	50.5	55.2	56.9	58.2	60.6	65.1	68.2
D13	125	PGA	40.8	42.7	45.8	48.1	46.8	49	52.5	55.2	56.4	58.8	63.1	66.3
D14	140	PGA	38.7	40.6	43.5	45.9	44.9	47.1	50.5	53.2	54.6	57.1	61.3	64.5
D16	160	PGA	37.2	39.1	41.9	44.2	43.6	45.7	49.1	51.7	51.6	54.1	58	61.1
D18	180	PGA	35.8	37.7	40.4	42.7	41.4	43.6	46.7	49.4	49.4	52	55.8	58.9
D20	200	PGA	34.4	36.3	38.9	41.2	39.9	42	45.1	47.7	47.8	50.3	54	57.1
D22	224	PGA	32.4	34.2	36.7	38.9	38.2	40.3	43.2	45.7	45.9	48.4	52	55
D25	250	PGA	31	32.7	35.1	37.1	37	39	41.9	44.3	43.8	46.2	49.6	52.5
D28	280	PGA	30 1	31 7	34	36	34 7	36 6	39 3	41 6	42 5	44 9	48 2	51
D32	315	PGA	29.4	31.1	33.3	35.3	33.3	35.1	37.6	39.8	40.5	42.8	45.9	48.6
D36	355	PGA									39.8	42	45.1	47.7
D40	400	PGA									37.9	40	43	45.5

H410				H411				H412					iN	Code
960	1150	1450	1740	960	1150	1450	1740	960	1150	1450	1740			
73.5	76.4	81.5	83.9	95.5	99.1	105.1	113.1	110	115	127	135	PGA	71	C71
71.7	73.5	78.7	81.5	92.4	99.1	102	108.7	110	115	122	131	PGA	80	C80
68.3	71.7	76.4	78.7	92.4	95.5	103	105.1	106	110	119	127	PGA	90	C90
65.6	68.3	73.5	76.4	90.1	92.4	99.1	102	103	110	115	122	PGA	100	D10
63.7	65.6	71.7	73.5	89.4	92.4	99.1	103	102	106	115	119	PGA	112	D11
61.1	63.7	68.3	71.7	85.8	89	95.5	99.8	99.7	103	110	115	PGA	125	D13
58.5	61.1	65.6	69	83	86.5	92.8	97.3	98.9	102	110	115	PGA	140	D14
56.7	59.4	63.7	67.1	79	82.5	88.5	93	95.3	99.4	106	111	PGA	160	D16
54.9	57.7	61.9	65.3	76.2	80	85.8	90.4	91.8	96.2	103	108	PGA	180	D18
51.8	54.5	58.5	61.9	72	75.7	81.3	85.8	87.6	92.1	98.9	104	PGA	200	D20
49.6	52.4	56.2	59.5	69	72.8	78.1	82.7	84.4	89	95.5	101	PGA	224	D22
48.2	50.8	54.5	57.7	65.6	69.2	74.2	78.5	79.7	84	90.2	95.4	PGA	250	D25
46.2	48.7	52.3	55.3	63.1	66.6	71.4	75.6	76.7	80.9	86.8	91.8	PGA	280	D28
44.1	46.5	49.9	52.8	61.6	64.9	69.7	73.7	72.7	76.7	82.2	87	PGA	315	D32
42.8	45.2	48.5	51.3	58.6	61.8	66.3	70.1	69.9	73.8	79.2	83.8	PGA	355	D36
40.8	43.1	46.2	48.9	55.9	58.9	63.2	66.8	68.3	72	77.3	81.8	PGA	400	D40

BONENG

H4 (kW)

H4 (kW)

Code	iN		H413				H414				H415			
			960	1150	1450	1740	960	1150	1450	1740	960	1150	1450	1740
C63	63	PGA												
C71	71	PGA	130	133	136	144	147	151	162	173	180	187	196	199
C80	80	PGA	127	130	134	141	143	148	158	169	174	180	191	193
C90	90	PGA	123	126	133	138	139	144	154	162	168	175	183	187
D10	100	PGA	120	121	130	134	136	141	149	158	161	160	172	174
D11	112	PGA	117	120	129	133	132	136	146	153	154	156	167	141
D13	125	PGA	114	117	126	131	128	132	142	147	149	152	163	168
D14	140	PGA	110	114	123	128	125	129	139	145	144	148	158	165
D16	160	PGA	104	108	116	122	121	126	135	142	138	143	153	160
D18	180	PGA	100	105	113	119	118	123	132	139	136	142	152	160
D20	200	PGA	98.2	103	110	116	111	117	126	133	132	139	149	157
D22	224	PGA	93.7	98.8	106	112	107	113	121	128	123	130	140	148
D25	250	PGA	89.1	94	100	106	104	110	118	125	117	123	132	140
D28	280	PGA	86.3	91.1	97.7	103	99.1	104	112	118	113	120	128	136
D32	315	PGA	82.8	87.3	93.7	99.1	95.5	100	108	114	108	114	122	129
D36	355	PGA	78.9	83.3	89.4	94.6	91.9	96.9	104	110	106	112	120	127
D40	400	PGA	75.6	80.9	86	90.1	88.3	93.2	100	105	103	104	116	123
D45	450	PGA	72.9	78.8	82.3	88.2	84.2	88.8	95.3	100	97.7	102	111	117

H416				H417				H418					iN	Code
960	1150	1450	1740	960	1150	1450	1740	960	1150	1450	1740			
				206	210	215	218					PGA	63	C63
193	200	210	215	199	203	210	213	211	214	225	228	PGA	71	C71
187	193	204	206	193	195	202	205	206	210	221	223	PGA	80	C80
180	187	196	203	185	190	195	197	199	204	213	215	PGA	90	C90
171	175	186	192	180	178	190	191	191	193	205	209	PGA	100	D10
166	167	179	183	173	173	186	189	185	185	198	201	PGA	112	D11
160	162	174	179	167	169	181	186	177	179	192	197	PGA	125	D13
153	158	169	175	161	164	176	183	171	175	188	194	PGA	140	D14
148	153	164	171	154	159	171	178	165	170	182	190	PGA	160	D16
142	148	159	167	151	157	169	177	158	165	177	185	PGA	180	D18
139	146	157	165	146	153	164	173	156	163	175	184	PGA	200	D20
136	144	154	163	136	144	154	163	151	159	170	180	PGA	224	D22
126	133	143	151	130	137	147	155	141	148	159	168	PGA	250	D25
120	126	135	143	126	133	143	151	133	141	151	160	PGA	280	D28
116	122	131	139	121	127	136	144	130	137	147	155	PGA	315	D32
111	118	126	134	118	124	133	141	124	131	141	149	PGA	355	D36
109	115	123	130	115	120	129	136	121	128	138	146	PGA	400	D40
102	109	116	123					116	125	130	139	PGA	450	D45

H4 (kW) H4 (kW)

Code	iN		H419				H420				H421				H422			
			960	1150	1450	1740	960	1150	1450	1740	960	1150	1450	1740	960	1150	1450	1740
C63	63	PGA																
C71	71	PGA	292	290	306	307	303	301	316	317	373	365	381	374	397	385	400	387
C80	80	PGA	277	277	292	295	299	299	315	317	358	352	369	365	377	368	384	376
C90	90	PGA	263	264	280	284	283	284	300	304	349	345	363	362	361	355	372	368
D10	100	PGA	253	246	264	263	272	276	294	303	346	325	348	335	356	358	379	385
D11	112	PGA	243	241	259	262	260	257	276	279	340	329	352	349	350	335	358	351
D13	125	PGA	235	237	254	259	249	250	268	273	330	325	348	350	344	335	359	358
D14	140	PGA	227	231	248	255	241	245	263	271	313	314	336	343	334	332	356	361
D16	160	PGA	218	224	240	249	232	238	255	265	301	305	327	336	317	319	342	350
D18	180	PGA	208	216	232	243	224	232	249	261	297	306	329	342	304	313	335	348
D20	200	PGA	201	211	226	238	214	224	240	253	280	292	314	329	300	313	335	352
D22	224	PGA	193	204	219	232	206	217	233	247	268	283	303	321	283	299	321	340
D25	250	PGA	183	193	208	220	198	209	224	237	253	267	287	304	270	285	305	323
D28	280	PGA	176	186	199	211	188	198	213	225	243	257	276	292	255	269	289	306
D32	315	PGA	172	182	195	207	181	191	204	216	233	246	264	280	245	259	278	294
D36	355	PGA	164	173	186	197	177	187	200	212	222	235	252	267	236	249	267	283
D40	400	PGA					168	177	190	201	*	*	*	*	225	238	255	270
D45	450	PGA					*	*	*	*					*	*	*	*

* 敬请垂询 * On request

H423				H424				H425				H426					iN	Code
960	1150	1450	1740	960	1150	1450	1740	960	1150	1450	1740	960	1150	1450	1740			
*	*	*	*					*	*	*	*	*	*	*	*	PGA	63	C63
*	*	*	*	*	*	*	*	*	*	*	*	*	*	*	*	PGA	71	C71
*	*	*	*	*	*	*	*	*	*	*	*	*	*	*	*	PGA	80	C80
*	*	*	*	*	*	*	*	*	*	*	*	*	*	*	*	PGA	90	C90
*	*	*	*	*	*	*	*	*	*	*	*	*	*	*	*	PGA	100	D10
*	*	*	*	*	*	*	*	*	*	*	*	*	*	*	*	PGA	112	D11
*	*	*	*	*	*	*	*	*	*	*	*	*	*	*	*	PGA	125	D13
*	*	*	*	*	*	*	*	*	*	*	*	*	*	*	*	PGA	140	D14
*	*	*	*	*	*	*	*	*	*	*	*	*	*	*	*	PGA	160	D16
*	*	*	*	*	*	*	*	*	*	*	*	*	*	*	*	PGA	180	D18
*	*	*	*	*	*	*	*	*	*	*	*	*	*	*	*	PGA	200	D20
*	*	*	*	*	*	*	*	*	*	*	*	*	*	*	*	PGA	224	D22
*	*	*	*	*	*	*	*	*	*	*	*	*	*	*	*	PGA	250	D25
*	*	*	*	*	*	*	*	*	*	*	*	*	*	*	*	PGA	280	D28
*	*	*	*	*	*	*	*	*	*	*	*	*	*	*	*	PGA	315	D32
*	*	*	*	*	*	*	*	*	*	*	*	*	*	*	*	PGA	355	D36
*	*	*	*	*	*	*	*									PGA	400	D40
																PGA	450	D45

* 敬请垂询 * On request

B2 (kW)

Code	iN		B204				B205				B206				B207				B208			
			960	1150	1450	1740	960	1150	1450	1740	960	1150	1450	1740	960	1150	1450	1740	960	1150	1450	1740
B50	5	PGA	41	40	30	*	50	45	*	*					66	56	*	*				
		PGB	113	132	139	149	145	178	184	193					246	276	283	283				
		PGC	110	122	127	136	148	182	190	184					255	282	294	306				
		PGD	194	228	249	276	263	338	336	376					468	538	581	630				
B56	5.6	PGA	41	40	33	*	49	48	37	*					67	60	*	*				
		PGB	109	128	135	147	137	177	169	185					232	265	274	282				
		PGC	106	118	123	131	137	178	159	185					234	261	272	285				
		PGD	187	221	241	268	243	330	313	359					432	501	543	593				
B63	6.3	PGA	40	40	34	26	50	50	*	*	58	55	*	*	64	60	*	*	76	69	*	*
		PGB	105	125	132	144	145	145	178	193	170	197	215	232	216	249	261	279	261	298	314	332
		PGC	101	113	118	126	148	165	174	184	211	234	260	275	213	236	248	262	310	345	362	380
		PGD	179	212	231	258	263	308	339	376	359	419	484	536	393	458	500	553	548	636	695	765
B71	7.1	PGA	38	39	35	29	49	48	37	*	59	57	43	*	63	61	*	*	76	71	*	*
		PGB	99	117	125	136	137	161	169	182	166	194	204	219	203	237	248	263	246	285	298	313
		PGC	93	103	108	116	137	152	159	170	206	229	238	254	195	218	227	241	286	318	331	350
		PGD	164	194	213	238	243	286	313	347	349	410	447	495	362	424	462	511	506	590	642	707
B80	8	PGA	36	37	34	30	47	47	38	*	57	57	45	*	61	60	45	*	73	71	*	*
		PGB	92.9	110	117	129	128	151	160	173	157	185	195	211	192	225	236	253	229	267	280	298
		PGC	86	95	99	106	126	140	146	156	190	211	221	235	181	202	210	223	258	287	300	318
		PGD	152	181	198	222	225	265	290	323	324	382	417	464	336	395	430	477	459	539	586	649
B90	9	PGA	35	36	33	30	45	45	39	31	55	55	46	*	60	59	47	*	70	69	52	*
		PGB	87.8	105	111	123	121	144	153	166	148	176	186	202	182	214	226	244	215	253	266	285
		PGC	79	88	92	98	115	129	134	144	174	194	202	217	170	189	197	210	238	265	277	294
		PGD	141	167	183	206	206	244	267	298	299	353	386	430	316	373	407	453	424	498	543	603
C10	10	PGA	29	30	29	26	42	43	37	31	52	53	45	37	56	57	47	*	67	67	53	*
		PGB	72.8	87.1	92.8	102	111	132	140	154	138	164	174	190	169	199	211	229	202	238	251	271
		PGC	63	70	74	79	103	115	120	129	160	179	186	200	154	171	179	191	219	244	254	271
		PGD	112	134	147	164	185	219	240	268	276	326	356	398	288	340	372	414	392	462	505	561
C11	11.2	PGA	28	30	28	26	38	39	34	29	50	50	44	37	51	51	43	34	65	65	53	49
		PGB	70.3	84.3	89.8	99	99.5	118	125	137	131	155	165	180	150	177	188	204	192	227	240	259
		PGC	60	67	70	75	90	101	105	113	146	163	170	183	134	150	156	167	206	229	238	255
		PGD	107	128	140	157	162	192	210	235	252	298	327	365	252	298	326	363	368	434	474	528
C13	12.5	PGA	26	27	26	24	36	37	34	29	46	47	43	37	47	48	42	34	61	62	52	41
		PGB	63	75.4	80.2	88.1	94	112	118.5	130	119	142	151	166	136	162	172	188	179	212	224	244
		PGC	53	59	61	66	82	92	96	103	130	146	151	162	120	134	138	148	187	209	218	233
		PGD	93.7	112	123	138	148	176	192.9	216	225	267	292	327	225	267	291	325	337	398	435	485
C14	14	PGA	24	26	25	24	34	35	32	29	42	43	39	34	43	43	38	31	55	56	49	40
		PGB	59.8	71.2	76	83.4	85.8	102	108	120	106	127	135	149	121	145	154	169	159	189	200	218
		PGC	48	54	56	60	74	82	85	91	114	127	133	142	105	117	122	130	164	182	190	204
		PGD	85.6	102.6	113	126	132	157	172	193	196	232	255	285	196	232	254	283	293	347	380	424

* 敬请垂询 * On request

B2 (kW)

B209				B210				B211				B212					iN	Code
960	1150	1450	1740	960	1150	1450	1740	960	1150	1450	1740	960	1150	1450	1740			
74	*	*	*					*	*	*	*					PGA	5	B50
297	325	328	313					487	500	478	392					PGB		
318	353	367	376					542	595	619	612					PGC		
578	657	705	753					984	1085	1144	1174					PGD		
77	64	*	*					102	*	*	*					PGA	5.6	B56
282	316	322	321					481	512	504	453					PGB		
294	325	339	351					514	567	590	595					PGC		
535	614	662	716					943	1058	1126	1182					PGD		
76	67	*	*	84	71	*	*	104	*	*	*	121	*	*	*	PGA	6.3	B63
265	301	315	330	300	337	354	367	441	480	479	514	556	591	581	606	PGB		
266	296	309	323	368	408	426	445	453	500	521	565	781	861	896	954	PGC		
489	566	617	676	643	740	809	884	834	944	1010	1161	1340	1500	1596	1795	PGD		
76	70	*	*	84	76	*	*	112	92	*	*	134	*	*	*	PGA	7.1	B71
250	288	299	311	284	325	336	346	436	485	493	485	546	598	601	572	PGB		
245	272	283	298	338	374	390	410	436	483	503	520	745	823	858	878	PGC		
451	525	570	625	594	689	747	817	808	925	996	1073	1278	1451	1556	1659	PGD		
74	71	*	*	83	78	*	*	110	95	*	*	132	108	*	*	PGA	8	B80
237	274	287	302	267	308	321	336	400	451	463	467	498	555	564	556	PGB		
226	252	262	278	306	341	355	374	386	428	446	464	654	723	754	778	PGC		
419	490	533	588	541	631	686	754	719	830	896	973	1129	1293	1392	1500	PGD		
73	71	51	*	81	77	*	*	110	99	*	*	138	119	*	*	PGA	9	B90
226	264	277	295	251	292	306	324	383	437	452	465	490	554	568	574	PGB		
214	238	248	263	282	314	327	346	363	404	421	441	633	702	732	762	PGC		
396	465	507	561	500	585	637	703	679	788	853	933	1094	1261	1363	1480	PGD		
70	68	52	*	78	76	54	*	106	98	*	*	130	116	*	*	PGA	10	C10
212	249	261	280	237	277	291	310	359	413	429	447	447	508	525	537	PGB		
195	218	227	242	260	290	302	320	334	370	386	406	560	622	648	678	PGC		
363	426	465	516	462	542	591	654	626	729	791	868	972	1126	1218	1329	PGD		
63	63	49	55	76	74	55	*	97	90	*	*	128	116	*	*	PGA	11.2	C11
187	220	232	250	226	265	279	299	318	367	382	401	426	488	506	522	PGB		
170	189	197	210	246	273	285	303	289	321	334	353	527	586	611	641	PGC		
316	372	406	451	438	514	561	622	543	633	688	757	918	1066	1156	1265	PGD		
60	60	49	46	72	72	57	*	93	88	*	*	123	115	*	*	PGA	12.5	C12
174	205	217	200	212	250	264	284	298	346	405	381	400	462	481	503	PGB		
154	172	180	191	224	250	261	278	263	294	306	323	483	538	561	590	PGC		
289	341	373	414	401	472	515	573	497	581	632	697	845	985	1070	1176	PGD		
54	54	46	45	65	65	54	*	84	80	*	*	111	106	*	*	PGA	14	C13
155	183	194	179	189	223	236	255	266	309	362	342	353	409	428	451	PGB		
135	150	158	167	194	217	226	242	229	255	266	282	418	464	484	512	PGC		
251	297	326	362	348	411	449	500	431	506	551	608	733	856	931	1027	PGD		

* 敬请垂询 * On request

B2 (kW) B2 (kW)

Code	iN		B213				B214				B215			
			960	1150	1450	1740	960	1150	1450	1740	960	1150	1450	1740
B63	6.3	PGA	*	*	*	*	*	*	*	*	*	*	*	*
		PGB	906	996	1036	1028	1129	1241	1290	1274	1302	1422	1478	1406
		PGC	1132	1245	1295	1285	1411	1551	1613	1592	1627	1778	1847	1758
		PGD	1574	1740	1839	1894	1954	2150	2267	2322	2168	2311	2393	2342
B71	7.1	PGA	128	*	*	*	150	*	*	*	*	*	*	*
		PGB	637	683	676	616	768	817	804	721	756	762	720	563
		PGC	878	969	1009	1020	1082	1193	1242	1251	1206	1324	1378	1350
		PGD	1541	1733	1848	1946	1895	2124	2261	2371	2028	2218	2331	2367
B80	8	PGA	131	*	*	*	154	*	*	*	*	*	*	*
		PGB	588	643	646	616	705	767	768	723	705	735	713	609
		PGC	782	865	901	922	948	1047	1091	1113	1085	1194	1242	1239
		PGD	1375	1562	1674	1785	1663	1884	2016	2143	1830	2032	2152	2230
B90	9	PGA	135	111	*	*	164	*	*	*	144	*	*	*
		PGB	565	630	640	630	699	775	785	766	684	732	724	658
		PGC	731	810	844	872	922	1020	1063	1095	1026	1132	1179	1191
		PGD	1296	1484	1598	1721	1625	1875	1996	2144	1741	1956	2085	2195
C10	10	PGA	133	114	*	*	160	133	*	*	146	*	*	*
		PGB	535	601	616	617	642	719	734	729	643	698	698	655
		PGC	677	750	782	812	814	903	941	975	936	1034	1078	1098
		PGD	1200	1391	1490	1614	1444	1658	1787	1932	1596	1806	1933	2052
C11	11.2	PGA	123	108	*	*	157	136	*	*	138	*	*	*
		PGB	476	539	555	562	613	691	709	713		637	641	614
		PGC	587	651	679	708	762	845	881	916	465	911	949	972
		PGD	1046	1208	1306	1420	1356	1563	1688	1831	1030	1605	1722	1839
C13	12.5	PGA	122	106	*	*	156	139	*	*	1199	*	*	*
		PGB	425	473	517	523	579	659	681	697	523	578	584	560
		PGC	597	588	637	657	706	783	817	854	736	878	882	868
		PGD	958	1125	1211	1329	1255	1454	1574	1718	1328	1524	1805	1639
C14	14	PGA	118	103	*	*	143	131	*	*	126	*	*	*
		PGB	391	429	472	484	514	589	611	633	481	502	516	491
		PGC	506	526	546	583	610	678	707	743	652	790	803	730
		PGD	863	1034	1108	1233	1092	1270	1377	1509	1217	1406	1623	1428

* 敬请垂询 * On request

B216				B217				B218					iN	Code
960	1150	1450	1740	960	1150	1450	1740	960	1150	1450	1740			
*	*	*	*	*	*	*	*					PGA	6.3	B63
1426	1555	1615	1522	1527	1661	1724	1598					PGB		
1782	1944	2019	1902	1909	2076	2155	1997					PGC		
2366	2499	2574	2482	2530	2633	2689	2533					PGD		
*	*	*	*	*	*	*	*	*	*	*	*	PGA	7.1	B71
815	809	754	560	838	811	740	503	897	849	760	473	PGB		
1316	1442	1500	1458	1430	1563	1625	1561	1535	1677	1742	1656	PGC		
2204	2394	2505	2519	2386	2563	2666	2639	2558	2723	2817	2751	PGD		
*	*	*	*	*	*	*	*	*	*	*	*	PGA	8	B80
784	807	775	641	793	800	756	592	874	868	808	600	PGB		
1225	1346	1401	1387	1297	1424	1481	1452	1434	1572	1634	1589	PGC		
2059	2273	2400	2467	2174	2378	2499	2539	2402	2608	2729	2743	PGD		
150	*	*	*	*	*	*	*	*	*	*	*	PGA	9	B90
730	773	759	674	774	807	782	669	823	847	812	671	PGB		
1094	1206	1256	1262	1234	1358	1413	1409	1299	1429	1486	1471	PGC		
1853	2073	2204	2306	2078	2308	2444	2533	2188	2414	2549	2619	PGD		
155	*	*	*	149	*	*	*	*	*	*	*	PGA	10	C10
704	759	753	694	737	783	770	688	799	839	818	712	PGB		
1037	1145	1192	1209	1145	1262	1314	1322	1237	1362	1418	1418	PGC		
1760	1984	2118	2237	1935	2167	2306	2416	2085	2322	2464	2564	PGD		
154	*	*	*	144	*	*	*	159	*	*	*	PGA	11.2	C11
662	720	721	679	669	720	714	656	760	809	797	715	PGB		
946	1045	1088	1110	1014	1119	1166	1181	1151	1270	1322	1331	PGC		
1616	1831	1960	2083	1720	1938	2068	2183	1940	2175	2315	2428	PGD		
149	*	*	*	140	*	*	*	158	*	*	*	PGA	12.5	C13
598	661	669	650	637	658	685	621	691	750	749	701	PGB		
831	920	958	986	905	966	1062	1078	1021	1127	1174	1195	PGC		
1430	1632	1754	1882	1623	1768	1809	1865	1730	1957	2093	2221	PGD		
139	*	*	*	136	*	*	*	157	*	*	*	PGA	14	C14
519	623	637	603	601	614	634	594	653	694	715	685	PGB		
781	838	882	903	847	935	967	1012	886	1043	1061	1054	PGC		
1327	1465	1632	1704	1504	1632	1777	1783	1625	1768	1876	2056	PGD		

* 敬请垂询 * On request

B3 (kW)

Code	iN		B304				B305				B306				B307				B308			
			960	1150	1450	1740	960	1150	1450	1740	960	1150	1450	1740	960	1150	1450	1740	960	1150	1450	1740
C16	16	PGA	35.2	37	36.8	36.8	47.9	49.5	48.3	46.7	55.4	57	55.4	53.1	74	75.7	72.9	68.5	86.2	87.5	83.3	76.8
		PGB	61.3	70	78.6	86.9	87.5	99.5	110	121	100	113	126	138	137	156	172	187	158	178	196	212
		PGC	57	63	70	77	92	102	113	123	102	114	126	137	160	178	195	213	178	198	218	236
		PGD	92.2	105	121	136	149	171	195	218	165	190	216	241	257	294	334	372	285	326	369	410
C18	18	PGA	34.3	36	35.9	35.9	46.5	48.1	47.2	45.9	53.7	55.5	54.1	52.2	71.7	73.6	71.1	67.4	83.2	84.8	81.1	75.5
		PGB	59.5	67.9	76.4	84.5	84.8	96.5	107	118	97.1	110	22	134	133	151	167	182	153	173	191	207
		PGC	55	61	68	74	89	98	109	119	98	109	120	131	154	171	188	205	174	193	212	230
		PGD	89.5	102	117	132	144	166	189	212	159	183	208	233	247	284	322	360	277	317	359	400
C20	20	PGA	32.4	34	34	34.1	44.6	46.4	45.6	44.5	51.9	53.7	52.6	51	68.9	70.9	68.8	65.7	79.4	81.2	78	73.3
		PGB	56.1	64.1	72.1	79.9	81.3	92.6	103	113	93.5	106	118	129	127	145	161	175	145	165	182	198
		PGC	52	58	64	70	86	95	105	114	94	106	116	127	147	164	180	197	163	182	199	217
		PGD	84.3	96.9	111	125	138	159	181	203	154	176	201	225	236	270	307	344	261	300	340	379
C22	22.4	PGA	31.6	33.3	33.3	33.6	44	45.8	45.1	44.3	50.4	52.3	51.4	50.1	66.8	68.9	67.2	64.6	77.4	79.4	76.7	72.7
		PGB	54.6	62.4	70.3	77.9	80	91.1	101	112	90.7	103	115	126	123	140	155	170	141	160	177	193
		PGC	50	56	62	69	84	94	104	114	92	102	114	124	142	158	174	190	158	176	194	210
		PGD	82.2	94.5	108	122	137	158	180	202	149	171	195	219	226	260	296	331	253	290	330	368
C25	25	PGA	30.1	31.8	31.9	32.3	41.8	43.7	43.3	43	48.6	50.6	50.1	49.4	65	67.4	66.2	64.6	74.7	77.1	75.2	72.5
		PGB	51.7	59.1	66.7	74.1	75.5	86.2	96.6	106	86.9	99	110	122	119	135	151	165	134	153	170	186
		PGC	48	53	59	65	80	88	98	107	88	98	108	118	135	150	166	182	151	169	186	203
		PGD	77.4	89	102	115	128	147	168	189	142	163	186	209	217	249	284	319	243	279	317	355
C28	28	PGA	29	30.7	30.9	31.4	40.6	42.6	42.5	42.6	48	50.3	50	49.9	62.1	64.8	64.1	63.4	72.7	75.5	74.4	72.9
		PGB	49.4	56.6	63.9	71.1	72.7	83	93.3	103	85.5	97.5	109	121	112	127	143	157	130	148	165	182
		PGC	45	50	56	61	75	83	93	102	87	97	107	118	125	139	154	169	146	163	180	197
		PGD	73.1	84.2	96.7	109	121	139	159	179	141	162	185	209	201	231	264	296	234	268	306	344
C32	31.5	PGA	27.5	29.1	29.4	30.1	38.6	40.6	40.7	41	45.5	47.8	47.8	48	59.2	62	61.7	61.6	70.3	73.4	72.7	72
		PGB	46.8	53.7	60.7	67.6	68.7	78.5	88.5	98.1	80.6	92.1	103	114	106	121	136	150	125	143	160	177
		PGC	42	47	52	57	70	78	86	95	82	91	101	111	117	130	144	158	139	155	172	189
		PGD	68.6	78.9	90.8	102	113	130	149	169	133	153	175	197	188	216	247	278	222	255	292	328
C36	35.5	PGA	25.9	27.5	27.8	28.5	36.4	38.4	38.6	39.1	44	46.3	46.4	46.9	56.4	59.2	59.1	59.4	67	70.2	69.8	69.7
		PGB	43.8	50.2	56.8	63.3	64.3	73.6	83	92.1	77.5	88.6	99.8	110	100	114	129	142	119	136	152	168
		PGC	39	43	48	53	64	71	79	87	77	86	95	105	108	121	134	147	130	144	160	175
		PGD	63.1	72.7	83.7	94.6	104	120	138	155	126	144	166	187	174	200	229	258	207	238	272	306
C40	40	PGA	22.6	24	24.3	25	31.7	33.5	33.7	34.2	41.8	44.1	44.3	44.9	49.4	52	52	52.4	64.1	67.3	67.1	67.2
		PGB	38.1	43.7	49.4	55.1	55.5	63.5	71.6	79.6	73.3	83.8	94.6	105	87.1	99.6	112	124	112	128	144	160
		PGC	33	36	40	45	53	59	66	73	72	80	89	98	90	100	110	122	121	134	150	164
		PGD	53.2	61.3	70.6	79.8	87	100	115	129	117	135	155	175	144	166	191	215	193	222	254	286
C45	45	PGA	22.1	23.5	23.8	24.5	30.9	32.7	32.9	33.5	39.3	41.5	41.8	42.5	48	50.6	50.8	51.3	60.9	64	64	64.4
		PGB	37.2	42.6	48.3	53.9	54	61.8	69.8	77.7	68.5	78.4	88.5	98.4	84.1	96.1	108	120	106	121	137	151
		PGC	32	35	39	43	51	57	64	70	66	74	82	90	86	96	106	118	111	124	138	152
		PGD	51.8	59.7	68.7	77.7	84	96.7	111	125	107	124	142	161	139	159	183	206	179	205	236	265
C50	50	PGA	22.4	23.8	24.2	24.9	30.8	32.7	33	33.9	34.4	36.4	36.8	37.7	47.6	50.3	50.7	51.7	53.6	56.6	56.9	57.8
		PGB	37.4	42.9	48.7	54.4	53.3	61.1	69.2	77.1	59.4	68	76.9	85.7	82.5	94.5	106	118	92.5	105	119	132
		PGC	32	35	39	43	50	56	62	69	55	62	69	76	83	93	103	114	93	103	115	126
		PGD	51.6	59.4	68.5	77.5	81.9	94.3	108	122	90.3	103	119	135	134	154	177	200	149	172	197	223
C56	56	PGA	20.7	22	22.4	23.1	28.5	30.2	30.7	31.6	33.6	35.7	36.2	37.2	44.3	47	47.5	48.7	52.1	55.2	55.7	57
		PGB	34.4	39.4	44.8	50	49.3	56.5	64	71.4	57.8	66.3	75.1	83.7	76.7	87.9	99.5	110	89.6	102	116	129
		PGC	28	32	35	39	45	50	56	62	53	59	66	73	76	84	94	103	89	98	110	122
		PGD	46.8	53.9	62.1	70.3	74.1	85.4	98.3	111	87.2	100	115	130	122	141	162	183	143	165	190	215
C63	63	PGA	19.9	21.2	21.6	22.3	27.4	29.1	29.5	30.4	33.4	35.5	36	37.1	42.8	45.5	46.1	47.3	51.5	54.6	55.2	56.6
		PGB	33.1	38	43.2	48.3	47.3	54.3	61.6	68.7	57.1	65.5	74.2	82.9	74.1	84.9	96.2	107	88.1	100	114	127
		PGC	27	30	34	37	43	47	53	58	52	58	65	71	72	80	89	98	86	96	107	118
		PGD	44.3	51	58.9	66.7	70.1	80.8	93	105	85.1	98	112	127	116	134	154	174	140	161	185	210
C71	71	PGA	18.4	19.6	20	20.7	26.1	27.7	28.2	29.1	30.8	32.8	33.3	34.3	40.8	43.3	43.9	45.2	47.8	50.8	51.4	52.7
		PGB	30.7	35.3	40	44.8	44.9	51.6	58.5	65.3	52.6	60.3	68.4	76.3	70.5	80.9	91.7	102	81.7	93.6	106	118
		PGC	24	27	30	34	39	44	49	54	47	52	58	64	66	74	82	90	79	87	98	107
		PGD	40.4	46.6	53.7	60.8	65.2	75.1	86.5	97.9	77.1	88.8	102	115	108	125	143	162	127	146	168	190
C80	80	PGA	20.7	22	19.2	19.9	30.1	32.1	27	27.9	29.5	31.4	31.9	32.9	39.1	41.5	42.1	43.4	46.2	49.1	49.7	51.1
		PGB	34.6	39.7	38.5	43.2	51.9	59.6	56.4	63	50.6	58.1	65.9	73.6	67.8	77.9	88	98.4	79	90.5	102	114
		PGC	28	32	29	32	48	54	46	51	44	49	55	61	63	70	78	86	75	82	92	102
		PGD	46.7	53.8	50.9	57.6	79.1	91.6	82	92.8	72.8	83.9	96.7	109	102	118	136	154	121	139	160	182
C90	90	PGA	19.9	21.2	18.3	19	28.3	30	25.8	26.7	28.2	30	30.5	31.5	37.4	39.6	40.3	41.6	44	46.8	47.4	48.8
		PGB	33	37.9	36.7	41.1	48.7	55.8	53.6	59.9	48.1	55.2	62.7	70	64.5	74.1	83.7	93.6	75.1	86.1	97.6	108
		PGC	27	30	27	29	44	49	43	47	41	46	51	56	58	65	72	79	69	77	86	94
		PGD	44.3	51	47.4	53.9	72.3	83.7	76.4	86.8	67.9	78.2	90.1	102	95.1	110	127	144	112	129	149	168

B3 (kW)

B309				B310				B311				B312					iN	Code
960	1150	1450	1740	960	1150	1450	1740	960	1150	1450	1740	960	1150	1450	1740			
99.4	100	94.3	85.1	110	110	103	90.8	133	129	114	89.8	155	147	125	*	PGA	16	C16
193	218	239	258	214	240	262	281	300	334	358	375	347	384	407	419	PGB		
243	270	295	319	274	306	332	358	340	378	406	434	446	496	530	561	PGC		
388	444	500	555	434	496	558	618	569	648	719	787	724	823	907	986	PGD		
96.5	97.7	92.5	84.4	102	102	96.3	86.1	132	129	115	93.1	156	149	129	*	PGA	18	C18
187	211	232	250	197	222	243	261	293	328	353	371	347	386	411	426	PGB		
234	261	286	309	252	281	306	331	333	370	399	427	446	497	532	565	PGC		
375	429	485	539	399	457	514	570	558	635	707	776	726	825	913	995	PGD		
92.8	94.3	89.8	82.9	105	106	100	90.8	126	124	112	93.3	147	141	124	96	PGA	20	C20
179	202	223	241	203	228	251	270	280	314	339	358	323	360	385	401	PGB		
224	250	274	297	258	287	314	340	317	353	381	409	413	459	493	526	PGC		
360	412	466	519	410	469	529	588	531	605	676	743	672	764	848	926	PGD		
90.7	92.5	88.6	82.7	97.5	98.9	93.9	86.2	122	120	110	93.7	148	144	128	102	PGA	22.4	C22
175	198	218	237	186	210	231	250	266	298	324	343	324	361	388	407	PGB		
218	242	266	289	236	263	288	312	294	327	354	381	412	458	494	527	PGC		
348	399	452	504	375	429	485	539	495	565	632	697	671	764	850	932	PGD		
87.3	89.7	86.9	82.8	94.3	96.4	92.8	87.2	117	117	109	97.2	144	142	130	110	PGA	25	C25
166	188	209	228	178	202	223	243	250	281	307	329	309	346	375	398	PGB		
202	226	248	270	227	253	278	302	270	300	326	352	391	436	472	507	PGC		
324	371	422	471	359	411	466	520	454	519	584	647	640	730	817	901	PGD		
83.9	86.8	85	82.5	92.7	95.6	93.1	89.4	113	114	109	100	140	140	131	117	PGA	28	C28
157	179	199	218	174	197	220	240	238	269	296	320	295	332	363	390	PGB		
188	209	230	252	219	244	269	294	250	279	306	331	365	406	443	478	PGC		
302	346	395	442	349	400	455	509	424	486	549	611	596	682	767	851	PGD		
80.6	83.9	82.7	81.3	89.1	92.4	90.7	88.4	108	111	106	100	133	135	129	118	PGA	31.5	C32
149	170	190	209	165	188	210	230	225	254	282	306	276	312	344	371	PGB		
176	196	217	238	203	226	250	273	233	259	285	310	334	371	406	441	PGC		
282	324	370	415	324	372	424	476	395	453	514	573	548	627	709	788	PGD		
76.9	80.3	79.6	78.9	85.3	88.8	87.7	86.3	105	108	105	100	128	131	125	118	PGA	35.5	C36
141	161	181	199	156	178	199	219	215	244	271	296	262	296	328	356	PGB		
161	179	198	218	190	211	234	256	221	246	270	295	311	346	380	413	PGC		
260	298	341	384	302	347	396	445	373	428	487	544	509	584	661	738	PGD		
72.1	75.4	75	74.7	81.6	85.2	84.4	83.6	99.6	102	100	97	122	125	121	115	PGA	40	C40
131	150	168	186	149	170	191	211	201	229	255	279	246	279	310	337	PGB		
146	162	179	197	178	198	219	240	202	226	248	271	288	321	352	384	PGC		
235	270	309	348	283	325	372	418	344	395	449	503	473	542	616	688	PGD		
66.4	69.6	69.4	69.5	77.7	81.3	80.8	80.4	91.6	95	93.2	90.8	117	121	118	113	PGA	45	C45
120	137	154	170	140	160	180	199	184	210	234	257	236	268	298	326	PGB		
131	146	162	178	162	181	201	220	182	202	224	245	272	302	334	363	PGC		
211	243	279	314	260	299	342	384	311	357	407	457	449	515	585	655	PGD		
65.5	69.1	69.3	70.2	73.1	77	77	77.7	92.4	96.6	95.8	95.2	112	116	115	113	PGA	50	C50
117	133	151	167	131	150	169	188	181	207	232	256	221	251	281	310	PGB		
125	139	155	170	147	164	182	200	178	198	219	240	250	278	307	337	PGC		
203	234	269	303	236	272	312	352	301	346	396	445	411	472	539	606	PGD		
60.7	64.3	64.8	66.1	67.7	71.5	72	73.2	84.5	88.9	88.9	89.4	103	108	108	108	PGA	56	C56
108	124	140	156	120	137	155	173	164	188	211	234	203	232	260	288	PGB		
112	125	139	154	133	148	165	182	158	175	194	214	223	249	276	303	PGC		
182	210	241	272	213	245	281	318	268	308	354	398	370	426	488	549	PGD		
58.7	62.2	62.8	64.2	66.5	70.4	71	72.5	81.7	86.1	86.3	87.3	103	108	108	108	PGA	63	C63
104	119	135	150	117	134	151	168	158	180	203	226	198	227	255	283	PGB		
106	118	131	145	127	142	158	174	148	165	183	202	217	242	268	294	PGC		
173	199	229	259	203	234	269	304	253	291	334	377	358	411	471	531	PGD		
55	58.3	59	60.4	61.7	65.3	65.9	67.4	75.7	79.9	80.2	81.3	94.8	99.8	99.9	100	PGA	71	C71
97.8	112	126	141	108	124	140	156	146	167	189	210	180	206	232	257	PGB		
95	106	118	130	114	127	142	156	133	148	165	181	192	214	238	262	PGC		
157	181	209	236	183	211	243	275	228	262	301	340	319	367	421	474	PGD		
53.2	56.3	57	58.6	59.6	63.1	63.8	65.3	73.1	77.2	77.6	78.8	90.7	95.5	95.8	96.9	PGA	80	C80
94.6	108	121	136	105	120	136	151	142	162	184	203	173	198	224	248	PGB		
90	101	112	123	107	119	134	147	125	138	155	170	179	200	222	244	PGC		
150	172	199	226	174	200	231	261	217	248	286	323	300	345	396	447	PGD		
50.6	53.7	54.4	56	55.9	59.3	60	61.5	68.6	72.6	73	74.2	84.5	89.2	89.6	90.9	PGA	90	C90
89.9	103	116	129	98.4	112	127	142	133	151	171	191	161	184	208	231	PGB		
83	94	104	114	97	108	121	133	112	126	141	154	161	179	199	219	PGC		
138	160	185	209	159	183	210	238	198	227	260	295	271	311	357	403	PGD		

B3 (kW)

Code	iN		B313				B314				B315			
			960	1150	1450	1740	960	1150	1450	1740	960	1150	1450	1740
C16	16	PGA	165	151	122	*	191	174	138	*	221	185	*	*
		PGB	388	426	445	450	448	492	511	513	553	597	597	568
		PGC	523	582	615	646	592	659	694	727	834	929	957	981
		PGD	846	958	1047	1128	959	1085	1181	1268	1322	1486	1583	1662
C18	18	PGA	167	155	128	*	195	180	146	*	216	185	*	*
		PGB	392	432	454	462	452	498	520	527	531	575	581	560
		PGC	526	586	622	655	596	663	702	737	801	892	924	952
		PGD	853	967	1060	1146	965	1093	1195	1289	1265	1424	1525	1610
C20	20	PGA	159	149	126	*	180	168	140	*	212	185	*	*
		PGB	367	406	428	440	413	456	480	489	513	557	568	555
		PGC	492	548	583	617	542	603	640	675	769	856	891	923
		PGD	798	905	996	1081	877	995	1092	1182	1215	1370	1475	1566
C22	22.4	PGA	154	147	126	*	185	174	148	*	210	187	*	*
		PGB	349	387	412	426	417	462	489	503	498	544	559	554
		PGC	459	511	546	580	546	609	649	686	728	810	849	883
		PGD	746	847	936	1019	885	1005	1107	1203	1155	1304	1412	1507
C25	25	PGA	149	144	128	102	176	170	150	116	204	189	153	*
		PGB	329	367	395	414	390	435	466	486	466	513	537	544
		PGC	422	470	506	540	510	568	610	650	658	733	776	816
		PGD	687	783	870	954	827	941	1045	1143	1047	1186	1297	1399
C28	28	PGA	144	143	131	112	172	170	155	130	205	195	168	*
		PGB	312	350	380	404	373	417	452	479	453	503	535	554
		PGC	391	436	472	508	474	528	572	614	631	703	751	798
		PGD	640	731	819	903	772	881	985	1085	1007	1145	1265	1378
C32	31.5	PGA	139	140	131	116	165	165	154	135	196	191	170	137
		PGB	296	333	365	391	350	393	430	460	423	473	508	534
		PGC	362	404	440	475	434	484	526	568	572	637	686	733
		PGD	595	680	766	849	710	811	912	1009	917	1044	1162	1274
C36	35.5	PGA	135	137	130	119	159	160	151	137	192	189	173	146
		PGB	284	321	353	381	332	375	412	443	407	457	495	525
		PGC	345	384	427	454	405	451	492	533	544	606	655	704
		PGD	566	648	732	814	662	758	855	949	873	996	1114	1228
C40	40	PGA	128	130	125	116	152	155	147	136	183	182	168	146
		PGB	267	302	334	362	315	355	392	424	383	430	469	500
		PGC	318	354	387	421	377	420	459	498	502	558	606	653
		PGD	523	599	678	755	617	706	798	888	808	923	1035	1144
C45	45	PGA	119	122	117	110	147	150	144	134	171	171	160	142
		PGB	244	279	306	333	301	341	377	409	352	397	434	465
		PGC	285	317	348	378	357	397	435	474	451	502	547	591
		PGD	467	535	607	677	586	671	760	847	728	832	936	1037
C50	50	PGA	122	126	124	120	141	146	142	138	178	182	174	163
		PGB	244	278	310	340	283	321	358	392	356	402	445	483
		PGC	282	314	346	378	330	367	405	442	454	505	554	602
		PGD	466	535	610	684	543	623	709	794	728	834	944	1053
C56	56	PGA	113	118	117	116	131	136	135	133	165	171	167	161
		PGB	223	254	285	314	258	294	330	363	325	369	411	450
		PGC	252	281	311	341	293	326	361	395	406	452	498	544
		PGD	416	478	547	614	486	558	637	716	652	748	852	954
C63	63	PGA	109	114	114	114	133	139	138	137	159	165	162	158
		PGB	214	244	275	303	259	296	332	367	309	352	393	431
		PGC	237	264	293	321	292	326	361	395	380	423	468	511
		PGD	393	452	517	582	481	553	633	712	612	703	802	899
C71	71	PGA	103	108	107	107	122	128	127	127	151	158	155	153
		PGB	201	229	258	285	236	269	302	334	292	333	372	409
		PGC	214	238	265	290	262	291	323	354	350	390	430	471
		PGD	356	410	469	528	431	495	567	638	567	651	743	834
C80	80	PGA	98	102	103	103	117	123	123	123	145	149	150	146
		PGB	217	233	243	261	227	259	291	323	282	312	351	376
		PGC	221	230	253	258	246	274	303	334	318	361	462	434
		PGD	321	380	427	462	407	468	536	604	516	603	657	773
C90	90	PGA	92	98	98	97	110	115	115	116	139	143	145	140
		PGB	206	214	219	241	212	242	273	302	271	296	330	352
		PGC	211	221	240	246	222	247	274	302	277	334	421	406
		PGD	307	356	386	412	369	425	487	549	463	554	601	724

* 敬请垂询 * On request

B3 (kW)

B316				B317				B318					iN	Code
960	1150	1450	1740	960	1150	1450	1740	960	1150	1450	1740			
227	186	*	*	241	189	*	*	245	*	*	*	PGA	16	C16
579	621	615	575	713	758	737	671	732	774	741	658	PGB		
863	961	984	1002	1012	1126	1143	1152	1034	1150	1158	1157	PGC		
1366	1532	1621	1691	1654	1849	1937	2000	1682	1876	1949	1994	PGD		
230	193	*	*	237	191	*	*	263	205	*	*	PGA	18	C18
573	617	617	586	686	734	722	669	763	811	787	714	PGB		
850	946	97	998	968	1078	1100	1116	1066	1186	1202	1210	PGC		
1344	1510	1608	1687	1584	1775	1872	1946	1738	1942	2033	2096	PGD		
223	191	*	*	234	194	*	*	246	198	*	*	PGA	20	C20
548	593	599	577	662	711	708	668	700	749	736	681	PGB		
808	899	932	959	931	1037	1066	1088	971	1082	1103	1119	PGC		
1280	1440	1542	1628	1523	1710	1815	1900	1589	1780	1876	1949	PGD		
219	192	*	*	236	201	*	*	243	202	*	*	PGA	22.4	C22
528	574	586	573	646	698	702	673	675	725	722	681	PGB		
773	861	897	929	891	992	1026	1054	931	1037	1066	1088	PGC		
1227	1383	1490	1582	1461	1644	1756	1851	1525	1712	1818	1902	PGD		
222	202	160	*	234	208	*	*	250	219	*	*	PGA	25	C25
513	563	585	587	607	662	681	674	661	718	732	714	PGB		
735	818	862	902	810	902	945	983	893	994	1035	1071	PGC		
1168	1322	1440	1546	1333	1505	1629	1738	1467	1654	1780	1890	PGD		
216	204	172	*	239	222	183	*	248	227	182	*	PGA	28	C28
480	531	562	577	596	656	689	700	621	682	711	716	PGB		
666	741	790	835	784	873	926	974	812	904	954	1001	PGC		
1060	1204	1326	1440	1292	1465	1605	1734	1336	1513	1650	1776	PGD		
215	208	183	142	232	221	190	*	250	236	199	*	PGA	31.5	C32
468	521	558	582	557	619	658	681	608	673	712	731	PGB		
638	710	762	812	717	798	854	906	786	874	932	986	PGC		
1020	1161	1288	1409	1184	1345	1487	1619	1296	1471	1620	1759	PGD		
205	201	181	149	228	221	196	155	241	232	203	155	PGA	35.5	C36
435	487	526	555	538	599	644	674	569	633	677	705	PGB		
580	646	697	746	682	759	817	873	718	799	857	913	PGC		
929	1059	1181	1299	1129	1286	1429	1566	1188	1351	1498	1636	PGD		
199	197	180	153	220	215	194	160	236	230	204	164	PGA	40	C40
419	470	510	541	508	568	614	647	548	611	657	690	PGB		
550	612	663	713	634	706	523	818	682	759	818	874	PGC		
884	1009	1129	1245	1053	1200	1339	1472	1132	1289	1434	1572	PGD		
190	189	176	154	206	204	187	159	228	224	203	169	PGA	45	C45
395	444	484	517	470	526	572	607	520	581	629	665	PGB		
507	565	614	662	575	641	694	746	638	710	768	823	PGC		
818	934	1049	1160	955	1090	1221	1346	1057	1205	1346	1481	PGD		
178	182	174	161	219	221	210	191	216	218	204	184	PGA	50	C50
636	411	453	491	478	539	593	640	481	542	594	639	PGB		
457	509	557	604	582	647	707	766	580	646	704	761	PGC		
738	845	956	1064	962	1101	1242	1380	963	1101	1240	1376	PGD		
186	191	186	179	205	210	203	193	228	233	225	211	PGA	56	C56
365	415	461	504	438	497	552	601	488	553	612	665	PGB		
458	510	562	613	523	582	640	697	583	649	713	775	PGC		
738	846	962	1076	867	994	1128	1260	966	1107	1255	1401	PGD		
171	177	173	168	198	204	199	192	211	217	211	202	PGA	63	C63
333	378	422	463	419	475	529	579	447	507	563	615	PGB		
408	454	502	548	492	548	604	659	526	585	644	702	PGC		
659	757	862	966	820	941	1071	1198	869	997	1133	1267	PGD		
164	170	167	163	187	194	190	184	204	210	205	198	PGA	71	C71
318	362	404	444	393	446	498	546	426	484	539	590	PGB		
385	428	465	518	455	506	558	610	496	552	608	664	PGC		
621	713	813	912	757	869	990	1109	824	945	1075	1204	PGD		
157	163	161	158	178	184	185	173	193	200	196	190	PGA	80	C80
301	343	384	423	374	416	468	524	400	454	507	556	PGB		
354	394	435	476	413	468	514	573	456	507	560	612	PGC		
573	658	751	843	695	794	875	1040	761	873	994	1114	PGD		
144	157	160	153					184	190	189	182	PGA	90	C90
289	332	364	402					383	414	476	502	PGB		
309	349	402	436	0	0	0	0	424	480	499	581	PGC		
533	612	695	783					721	819	873	1027	PGD		

* 敬请垂询 * On request

B3 (kW) B3 (kW)

Code	iN		B319				B320				B321				B322			
			960	1150	1450	1740	960	1150	1450	1740	960	1150	1450	1740	960	1150	1450	1740
C16	16	PGA	*	*	*	*	*	*	*	*								
		PGB	*	*	*	*	*	*	*	*								
C18	18	PGA	*	*	*	*	*	*	*	*	*	*	*	*				
		PGB	*	*	*	*	*	*	*	*	*	*	*	*				
C20	20	PGA	271	211	*	*	*	*	*	*	270	*	*	*	*	*	*	*
		PGB	814	865	839	761	*	*	*	*	899	920	813	622	*	*	*	*
C22	22.4	PGA	276	222	*	*	286	226	*	*	279	*	*	*	270	*	*	*
		PGB	795	850	836	774	833	888	864	789	881	910	824	661	907	920	793	576
C25	25	PGA	281	241	*	*	297	250	*	*	292	*	*	*	291	*	*	*
		PGB	763	826	833	803	816	880	881	840	846	889	841	732	893	926	844	688
C28	28	PGA	285	257	200	*	241	269	*	*	301	244	*	*	306	*	*	*
		PGB	731	800	828	826	826	854	878	869	811	868	855	794	857	906	869	773
C32	31.5	PGA	279	260	216	*	302	279	227	*	299	257	*	*	312	256	*	*
		PGB	688	760	799	814	782	824	863	874	759	822	831	802	821	881	871	815
C36	35.5	PGA	278	265	228	*	302	277	235	*	297	265	*	*	306	263	*	*
		PGB	666	739	786	813	749	779	825	849	731	798	821	813	767	830	839	810
C40	40	PGA	267	258	266	175	293	277	240	*	287	262	208	*	302	266	*	*
		PGB	627	698	747	779	703	754	805	836	686	753	783	786	728	804	822	808
C45	45	PGA	253	247	221	179	289	270	240	190	270	251	207	*	291	263	206	*
		PGB	582	650	700	737	679	712	765	801	634	698	733	746	692	758	785	785
C50	50	PGA	256	257	240	212	278	266	247	216	302	293	260	206	283	269	232	*
		PGB	561	631	690	739	638	669	730	780	668	744	799	837	641	712	757	783
C56	56	PGA	251	256	245	229	267	272	260	240	294	293	271	236	312	307	279	234
		PGB	540	611	675	731	595	645	712	771	630	708	772	823	675	755	818	866
C63	63	PGA	245	251	243	231	268	266	256	242	287	289	272	244	295	297	275	240
		PGB	520	589	654	712	571	622	689	750	608	686	752	808	633	712	776	828
C71	71	PGA	232	239	232	222	260	259	251	239	272	275	261	238	291	292	273	243
		PGB	487	553	615	671	549	600	666	726	569	643	707	763	612	689	754	808
C80	80	PGA	*	*	*	*	252	247	240	231	*	*	*	*	276	278	262	237
		PGB	*	*	*	*	529	563	626	684	*	*	*	*	574	647	710	764
C90	90	PGA	*	*	*	*	*	*	*	*	*	*	*	*	*	*	*	*
		PGB	*	*	*	*	*	*	*	*	*	*	*	*	*	*	*	*

* 敬请垂询 * On request

B323				B324				B325				B326					iN	Code
960	1150	1450	1740	960	1150	1450	1740	960	1150	1450	1740	960	1150	1450	1740			
																PGA	16	C16
																PGB		
																PGA	18	C18
																PGB		
*	*	*	*													PGA	20	C20
*	*	*	*													PGB		
*	*	*	*	*	*	*	*	*	*	*	*	*	*	*	*	PGA	22.4	C22
*	*	*	*	*	*	*	*	*	*	*	*	*	*	*	*	PGB		
*	*	*	*	*	*	*	*	*	*	*	*	*	*	*	*	PGA	25	C25
*	*	*	*	*	*	*	*	*	*	*	*	*	*	*	*	PGB		
*	*	*	*	*	*	*	*	*	*	*	*	*	*	*	*	PGA	28	C28
*	*	*	*	*	*	*	*	*	*	*	*	*	*	*	*	PGB		
*	*	*	*	*	*	*	*	*	*	*	*	*	*	*	*	PGA	31.5	C32
*	*	*	*	*	*	*	*	*	*	*	*	*	*	*	*	PGB		
*	*	*	*	*	*	*	*	*	*	*	*	*	*	*	*	PGA	35.5	C36
*	*	*	*	*	*	*	*	*	*	*	*	*	*	*	*	PGB		
*	*	*	*	*	*	*	*	*	*	*	*	*	*	*	*	PGA	40	C40
*	*	*	*	*	*	*	*	*	*	*	*	*	*	*	*	PGB		
*	*	*	*	*	*	*	*	*	*	*	*	*	*	*	*	PGA	45	C45
*	*	*	*	*	*	*	*	*	*	*	*	*	*	*	*	PGB		
*	*	*	*	*	*	*	*	*	*	*	*	*	*	*	*	PGA	50	C50
*	*	*	*	*	*	*	*	*	*	*	*	*	*	*	*	PGB		
*	*	*	*	*	*	*	*	*	*	*	*	*	*	*	*	PGA	56	C56
*	*	*	*	*	*	*	*	*	*	*	*	*	*	*	*	PGB		
*	*	*	*	*	*	*	*	*	*	*	*	*	*	*	*	PGA	63	C63
*	*	*	*	*	*	*	*	*	*	*	*	*	*	*	*	PGB		
*	*	*	*	*	*	*	*	*	*	*	*	*	*	*	*	PGA	71	C71
*	*	*	*	*	*	*	*	*	*	*	*	*	*	*	*	PGB		
*	*	*	*	*	*	*	*	*	*	*	*	*	*	*	*	PGA	80	C80
*	*	*	*	*	*	*	*	*	*	*	*	*	*	*	*	PGB		
				*	*	*	*									PGA	90	C90
				*	*	*	*									PGB		

* 敬请垂询 * On request

BONENG

B4 (kW) B4 (kW)

Code	iN		B405				B406				B407				B408			
			960	1150	1450	1740	960	1150	1450	1740	960	1150	1450	1740	960	1150	1450	1740
D10	100	PGA	26.6	28.5	29.6	30.9	30.6	32.7	34	35.4	38.8	41.4	43.1	44.8	45.3	48.2	50.2	52
D11	112	PGA	25.6	27.5	28.6	29.8	29.9	32	33.3	34.7	37.4	39.9	41.5	43.2	44	46.9	48.8	50.6
D13	125	PGA	24.5	26.3	27.4	28.5	28.6	30.6	31.8	33.2	35.7	38.2	39.7	41.4	41.6	44.4	46.2	48
D14	140	PGA	23.4	25.1	26.1	27.3	27.5	29.5	30.7	32	33.9	36.3	37.8	39.4	40.1	42.9	44.6	46.5
D16	160	PGA	21.5	23.1	24.1	25.2	26.3	28.2	29.4	30.7	30.9	33.2	34.5	36.1	38.2	41	42.7	44.5
D18	180	PGA	21.1	22.7	23.6	24.7	25.1	27	28.1	29.4	30.1	32.4	33.7	35.2	36.4	39	40.7	42.5
D20	200	PGA	20.4	21.9	22.8	23.9	23.1	24.9	25.9	27.1	29.9	32.1	33.5	35	33.2	35.7	37.2	38.9
D22	224	PGA	19	20.4	21.3	22.3	22.7	24.4	25.4	26.7	27.8	30	31.2	32.7	32.4	34.9	36.4	38.1
D25	250	PGA	18.5	20	20.8	21.8	21.8	23.5	24.5	25.7	26.9	29	30.2	31.7	32.1	34.6	36	37.8
D28	280	PGA	17.6	19	19.8	20.9	20.4	22	22.9	24.1	25.2	27.2	28.4	29.8	30	32.3	33.7	35.4
D32	315	PGA	16.5	17.8	18.6	19.5	19.8	21.4	22.3	23.5	23.6	25.5	26.6	27.9	28.8	31.1	32.4	34.1
D36	355	PGA	16.0	17.3	18.1	19.0	19	20.5	21.3	22.4	22.7	24.4	25.4	26.6	27.1	29.2	30.4	32
D40	400	PGA	15.4	16.6	17.3	18.1	17.7	19.1	19.9	21	21.2	22.7	23.7	24.9	25.4	27.4	28.6	30

B409				B410				B411				B412					iN	Code
960	1150	1450	1740	960	1150	1450	1740	960	1150	1450	1740	960	1150	1450	1740			
55.6	59.1	61.5	63.6	60.4	64.1	66.7	68.8	84.4	88.9	92.4	94.7	101	106	110	112	PGA	100	D10
53.5	56.9	59.2	61.4	59	62.7	65.3	67.5	80.4	84.9	88.3	90.7	97.6	102	106	109	PGA	112	D11
51	54.4	56.6	58.8	56	59.7	62.1	64.3	77	81.5	84.8	87.3	93.2	98.4	102	105	PGA	125	D13
48.1	51.4	53.5	55.6	53.9	57.5	59.9	62.2	72.8	77.3	80.4	83.1	88.8	94.1	97.8	100	PGA	140	D14
44	47	49	51	51.3	54.9	57.2	59.5	66.4	70.7	73.6	76.2	85.1	90.4	94.1	97.2	PGA	160	D16
42.9	46	47.9	50	48.7	52.2	54.3	56.6	64.6	69	71.8	74.6	80.6	85.9	89.3	92.6	PGA	180	D18
42	45.1	47	49.1	44.6	47.8	49.8	52	63.2	67.7	70.5	73.4	73.6	78.7	81.9	85.2	PGA	200	D20
39.3	42.3	44	46.1	43.4	46.7	48.6	50.9	59.4	63.8	66.5	69.5	71.8	77	80.2	83.7	PGA	224	D22
37.9	40.8	42.5	44.6	42.5	45.8	47.8	50.1	57.5	61.9	64.5	67.6	70.1	75.4	78.6	82.3	PGA	250	D25
36.1	39	40.6	42.7	39.8	43	44.8	47.1	55	59.3	61.8	65	65.8	71	74	77.7	PGA	280	D28
33.9	36.6	38.2	40.1	38.4	41.5	43.2	45.4	51.3	55.4	57.8	60.7	63.7	68.7	71.6	75.2	PGA	315	D32
31.9	34.4	35.8	37.6	36.6	39.6	41.2	43.3	48.9	52.9	55.1	57.9	60.8	65.6	68.4	71.8	PGA	355	D36
								46.6	52.9	52.5	55.2	56.7	61.2	63.8	67	PGA	400	D40

B4 (kW) B4 (kW)

Code	iN		B413				B414				B415			
			960	1150	1450	1740	960	1150	1450	1740	960	1150	1450	1740
C90	90	PGA												
D10	100	PGA	112	117	121	123	130	135	140	142	146	150	156	155
D11	112	PGA	107	112	116	118	126	132	137	139	139	144	149	150
D13	125	PGA	102	108	112	114	119	125	130	133	132	138	143	144
D14	140	PGA	97.6	103	107	109	114	120	125	128	128	134	139	141
D16	160	PGA	92.4	97.8	101	104	110	116	121	124	121	127	132	135
D18	180	PGA	87.2	92.8	96.5	99.8	103	110	114	118	114	120	125	129
D20	200	PGA	85.2	91	94.7	98.3	98.5	105	109	113	112	119	124	128
D22	224	PGA	79.9	85.6	89.1	92.9	93.2	99.8	104	108	105	112	117	121
D25	250	PGA	77.3	83.1	86.6	90.6	90.6	97.4	101	106	102	109	114	119
D28	280	PGA	73	78.8	82.1	86.3	85.2	92	95.9	100	95	102	106	112
D32	315	PGA	69.6	75.2	78.4	82.3	82.4	89	92.7	97.4	89.7	96.9	100	106
D36	355	PGA	67	68.2	76.2	79.3	77.8	84	87.6	92	82.3	92.6	95	103
D40	400	PGA	63.2	65.1	72.8	76.5	74.1	80	83.4	87.6	79.6	89.1	92	99

B416				B417				B418					iN	Code
960	1150	1450	1740	960	1150	1450	1740	960	1150	1450	1740			
				175	176	178	183					PGA	90	C90
160	163	169	168	164	167	170	173	180	182	188	185	PGA	100	D10
151	155	161	161	157	161	165	167	169	173	179	177	PGA	112	D11
144	149	155	155	149	154	160	159	161	166	172	171	PGA	125	D13
137	143	148	150	144	149	156	155	154	159	165	166	PGA	140	D14
132	138	143	146	136	142	150	147	148	155	160	162	PGA	160	D16
124	131	136	140	128	135	143	140	139	146	152	155	PGA	180	D18
117	125	130	134	126	134	143	139	132	140	146	150	PGA	200	D20
116	123	128	133	117	125	135	130	130	138	144	149	PGA	224	D22
108	116	120	126	114	122	133	127	122	131	136	142	PGA	250	D25
104	113	117	123	107	115	126	120	117	127	132	139	PGA	280	D28
98.5	106	110	116	101	109	119	113	110	119	124	131	PGA	315	D32
92.4	99.7	103	109	97	102	113	108	104	113	117	123	PGA	355	D36
88	95.2	99	105					108	110	113	117	PGA	400	D40

B4 (kW) B4 (kW)

Code	iN		B419				B420				B421				B422			
			960	1150	1450	1740	960	1150	1450	1740	960	1150	1450	1740	960	1150	1450	1740
C90	90	PGA																
D10	100	PGA	227	228	236	230	246	247	255	247	319	311	321	301	344	330	339	312
D11	112	PGA	216	219	227	223	232	235	243	238	309	306	315	300	322	314	323	302
D13	125	PGA	205	210	218	216	221	226	234	231	291	291	300	290	313	309	318	303
D14	140	PGA	198	204	211	212	211	217	225	224	281	284	294	288	294	294	304	294
D16	160	PGA	187	194	202	204	203	210	218	220	265	271	281	278	284	288	298	292
D18	180	PGA	175	183	190	194	191	200	208	211	248	256	266	266	269	276	286	285
D20	200	PGA	174	183	191	196	179	189	196	201	240	251	260	264	251	261	271	274
D22	224	PGA	163	174	181	187	179	190	198	205	224	237	246	253	243	256	266	273
D25	250	PGA	158	169	176	184	168	180	187	195	217	232	241	251	227	243	252	262
D28	280	PGA	148	160	167	175	161	174	182	191	207	224	233	245	220	237	247	260
D32	315	PGA	140	152	158	166	153	165	172	180	193	209	217	228	240	227	236	248
D36	355	PGA	*	*	*	*	144	155	162	170	*	*	*	*	196	211	220	231
D40	400	PGA					*	*	*	*	*	*	*	*	*	*	*	*

* 敬请垂询 * On request

B423				B424				B425				B426					iN	Code
960	1150	1450	1740	960	1150	1450	1740	960	1150	1450	1740	960	1150	1450	1740			
*	*	*	*					*	*	*	*	*	*	*	*	PGA	90	C90
*	*	*	*	*	*	*	*	*	*	*	*	*	*	*	*	PGA	100	D10
*	*	*	*	*	*	*	*	*	*	*	*	*	*	*	*	PGA	112	D11
*	*	*	*	*	*	*	*	*	*	*	*	*	*	*	*	PGA	125	D13
*	*	*	*	*	*	*	*	*	*	*	*	*	*	*	*	PGA	140	D14
*	*	*	*	*	*	*	*	*	*	*	*	*	*	*	*	PGA	160	D16
*	*	*	*	*	*	*	*	*	*	*	*	*	*	*	*	PGA	180	D18
*	*	*	*	*	*	*	*	*	*	*	*	*	*	*	*	PGA	200	D20
*	*	*	*	*	*	*	*	*	*	*	*	*	*	*	*	PGA	224	D22
*	*	*	*	*	*	*	*	*	*	*	*	*	*	*	*	PGA	250	D25
*	*	*	*	*	*	*	*	*	*	*	*	*	*	*	*	PGA	280	D28
*	*	*	*	*	*	*	*	*	*	*	*	*	*	*	*	PGA	315	D32
*	*	*	*	*	*	*	*	*	*	*	*	*	*	*	*	PGA	355	D36
				*	*	*	*									PGA	400	D40

* 敬请垂询 * On request

9 输出轴允许的附加径向力

9 Permissible additional radial force on output shaft

9.1 输出轴d上允许的附加径向力

9.1 Permissible additional radial force on output shaftd

允许的附加径向力FR2 (kN)，作用于输出轴轴伸中部

Permissible additional radial force FR2 (kN), applied at midpaint of extension of output shaft

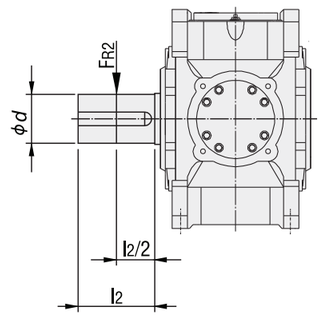

Type	Arrangement	04	05	06	07	08	09	10	11	12
H2..HS	A+B+G+H	10	22	22	30	30	30	45	64	64
	C+D	10	13	13	18	18	20	28	35	35
H3..HS	A+B+G+H		29	29	40	40	40	60	85	85
	C+D		18	18	26	26	30	40	50	50
H4..HS	C+D				40	40	40	60	85	85
	A+B+G+H		18	18	26	26	30	40	50	50
B2..HS	A+C	13	27	27	37	37	38	55	78	78
	B+D	12	15	15	17	17	20	30	35	35
B3..HS	A+C	14	29	29	40	40	40	60	85	85
	B+D		18	18	26	26	30	40	50	50
B4..HS	A+C		29	29	40	40	40	60	85	85
	B+D		18	18	26	26	30	40	50	50

Type	Arrangement	13	14	15	16	17	18	19	20	21	22	23	24	25	26
H2..HS	A+B+G+H	150	150	160	205	205	205	365	372	395	400	470	465	460	530
	C+D	112	112	120	135	135	135	284	305	308	330	365	380	355	430
H3..HS	A+B+G+H	190	190	200	265	265	265	365	372	395	400	470	465	460	530
	C+D	150	150	160	185	185	190	284	305	308	330	365	380	355	430
H4..HS	C+D	190	190	200	265	265	265	365	372	395	400	470	465	460	530
	A+B+G+H	150	150	160	185	185	190	284	305	308	330	365	380	355	430
B2..HS	A+C	160	160	170	210	210	210								
	B+D	110	110	115	145	145	145								
B3..HS	A+C	190	190	200	265	265	265	365	372	395	400	470	465	460	530
	B+D	150	150	160	185	185	190	284	305	308	330	365	380	355	430
B4..HS	A+C	190	190	200	265	265	265	365	372	395	400	470	465	460	530
	B+D	150	150	160	185	185	190	284	305	308	330	365	380	355	430

注：1.如果给定了力的作用角和旋转方向，通常情况下,可允许承受较大的附加力。请与我司联系。
2.*允许的附加径向力FR2(KN)，作用于输出轴端中部，当作用力不在轴端中部时，请参见9.2。
3.基础螺栓的最低性能等级为8.8级。基础必须干燥,不得有油脂。如用户要求，允许输入轴d1上附加径向力,具体请与我司联系。

Note：1. If the angle ofapplied force and the direction of rotation are given, higheradditionalforce can mostlv allowed.Please consult us.
2.*Permissible Additional Radial Forces FR2(kN) acting on the center of the output shaft. For application offorce outside thecenter ofthe shaft end, see 9.2.
3. Lowest performance level offoundation bolt is 8.8. The foundation should be dry and grease free. If customers haverequirements,radial force is allowed to be applied at input shaft d1. Please consult us.

9.2 输出轴d上允许的附加径向力（作用力不在输出轴轴伸中部）

9.2 Additional radial force allowed on output shaftd

$F_{RZ2} = F_{R2} \times k$

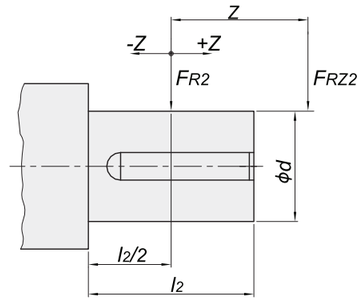

F_{RZ2}	允许的外部径向力	Permissible external radial force
F_{R2}	允许的附加径向力根据9.1表确定。	Permissible additional radia forceDetermined according to table 9.1
k	作用力系数根据下表确定	Apllied force factor should bedetermined according to the following table

作用力系数k　　Applied force factor k

Type	距离z/(mm)																Distance z(mm)		
	-300	-250	-200	-150	-100	-75	-50	-25	0	25	50	75	100	150	200	250	300	350	400
04							1.17	1.08	1	0.86	0.76	0.68	0.62	0.52	0.44				
05/06						1.22	1.14	1.06	1	0.88	0.79	0.72	0.66	0.62	0.52	0.44			
07/08						1.19	1.12	1.06	1	0.89	0.81	0.74	0.68	0.58	0.51	0.46	0.41		
09/10					1.22	1.15	1.10	1.05	1	0.90	0.82	0.76	0.70	0.61	0.54	0.48	0.44		
11/12					1.18	1.13	1.08	1.04	1	0.91	0.84	0.78	0.73	0.64	0.57	0.51	0.47		
13/14				1.24	1.15	1.11	1.07	1.03	1	0.92	0.86	0.80	0.75	0.67	0.60	0.55	0.50		
15/16				1.20	1.12	1.09	1.06	1.03	1	0.93	0.87	0.82	0.77	0.69	0.63	0.58	0.53		
17/18			1.25	1.17	1.11	1.08	1.05	1.03	1	0.94	0.88	0.84	0.79	0.72	0.66	0.60	0.56		
19/20			1.22	1.13	1.10	1.06	1.04	1.02	1	0.95	0.90	0.85	0.81	0.74	0.69	0.62	0.58		
21/22		1.27	1.21	1.12	1.09	1.05	1.04	1.02	1	0.96	0.92	0.86	0.83	0.75	0.71	0.64	0.60		
23/24		1.27	1.20	1.10	1.08	1.04	1.03	1.02	1	0.97	0.93	0.87	0.84	0.77	0.72	0.65	0.61		
25/26	1.29	1.22	1.18	1.08	1.07	1.03	1.03	1.02	1	0.98	0.96	0.87	0.83	0.76	0.70	0.64	0.61	0.55	0.51

10 布置形式

10.1 H系列布置形式

10.1.1 轴布置

10 Shaft assemblies

10.1 H series shaft assemblies

10.1.1 Shaft assemblies

H...HS
H...VS

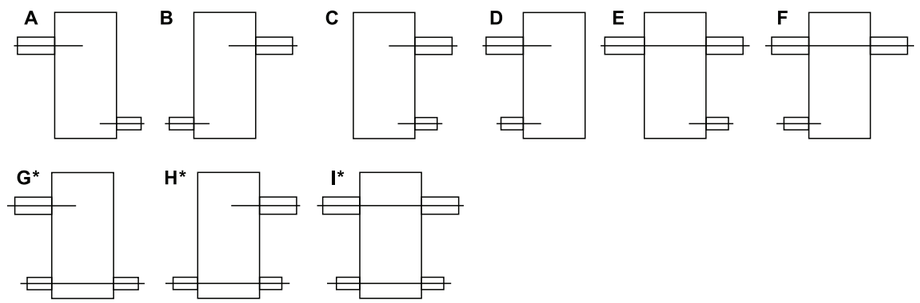

H...HH
H...VH
(04-18 Size)

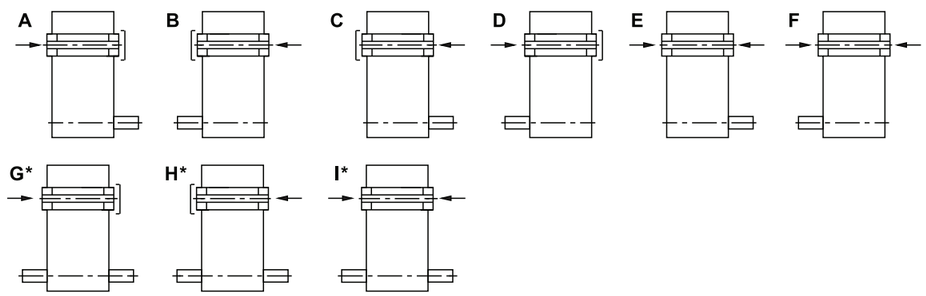

H...HD
H...VD
(04-18 Size)

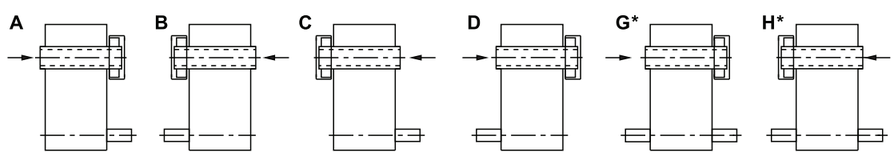

H...HK
H...VK
(04-18 Size)

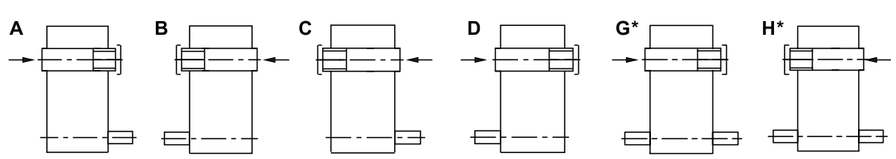

Type \ Size (iN)	04	05	06	07	08	09	10	11	12	13	14
H2	1.8-4 6.3-14	6.3-14	2-4.5 6.3-14	6.3-14	2.24-5 6.3-14	2.24-5 6.3-14	6.3-14	2.24-5 6.3-14	3.55-5.6 6.3-14	6.3-14	3.15-14
H3	/	16-63								16-63	
H4	/	/	/	71-200		71-280				71-280	

Type \ Size (iN)	15	16	17	18	19	20	21	22	23	24	25	26
H2	6.3-14	3.15-14	5.6-14	3.55-16	8-12.5	9-14	8-12.5	9-14	8-12.5	9-14	/	/
H3	16-63		14-56	16-63	16-56	16-56	18-56	20-63	18-56	20-63	/	/
H4	71-280		63-250	71-280	71-250	71-280	71-250	71-280	63-250	71-280	63-250	63-250

注：*当布置形式G/H/在右表iN中可供货。

Note：*Shaft assemblies G/H/l is available when nominal ratio is within the range ofvalue showed in right table.

10.1.2旋转方向关系

10.1.2Direction of rotation

H2..H

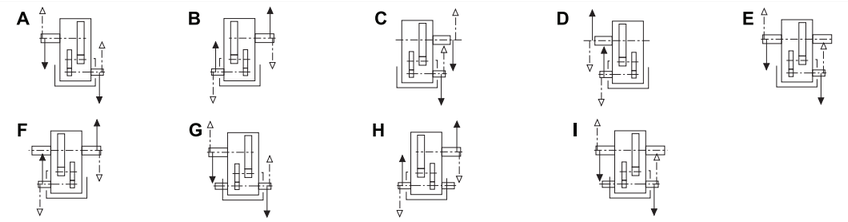

H2..V

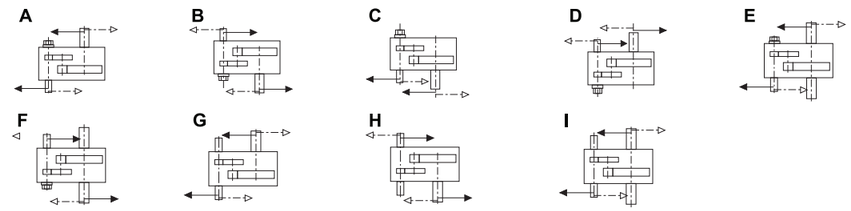

H3..H

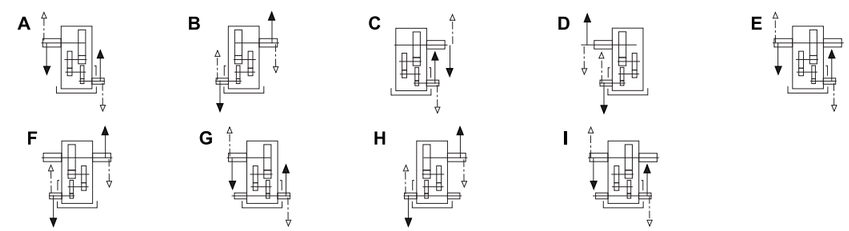

H3..V

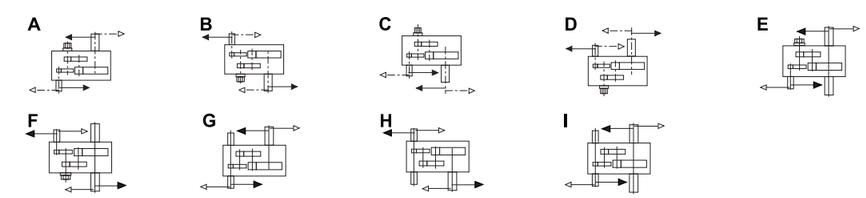

H4..H

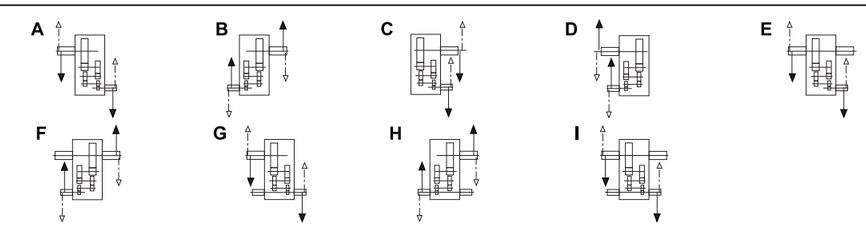

H4..V

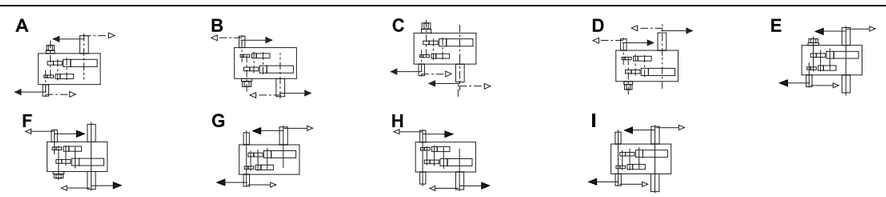

注：齿轮箱可双向运转,图中“⊞”为轴端油泵。

Note：Direction of rofation is reversible," ⊞ " is shaft end oil pump.

10.2 B系列布置形式
10.2.1 轴布置

10.2 B series shaft assemblies
10.2.1 Shaft assemblies

B...HS B...VS	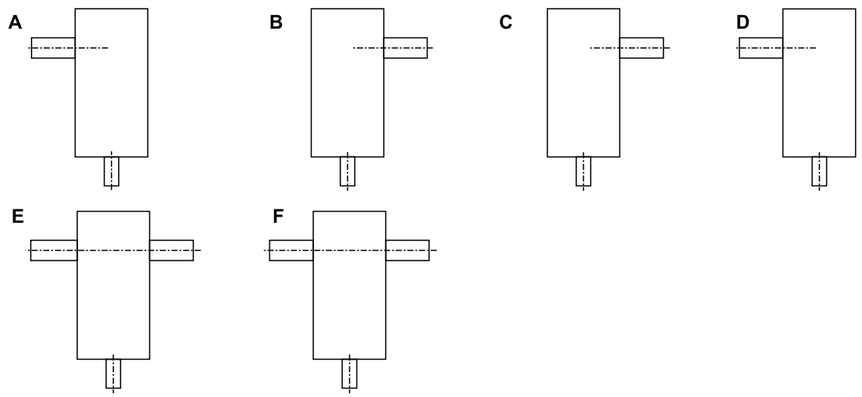
B...HH B...VH (04-18 Size)	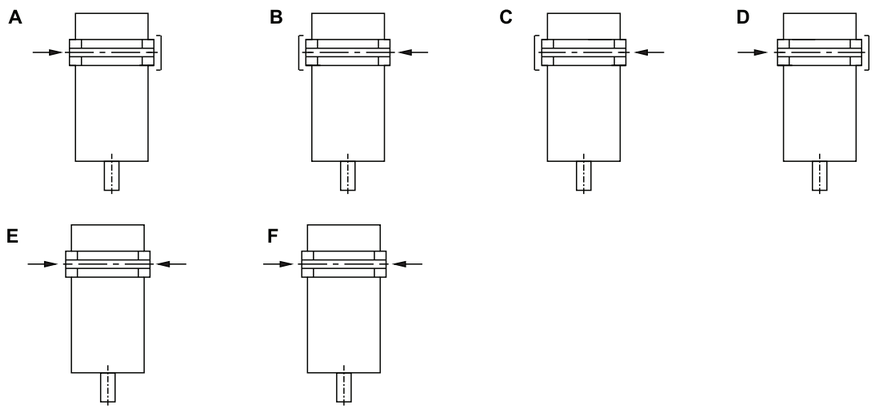
B...HD B...VD (04-18 Size)	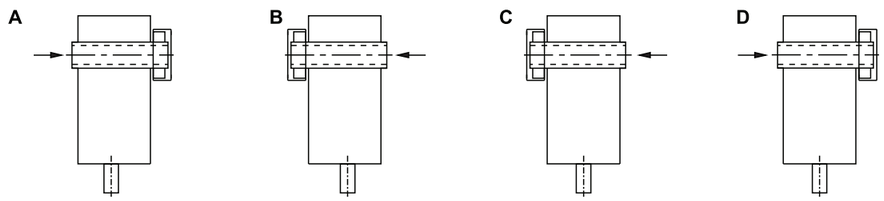
B...HK B...VK (04-18 Size)	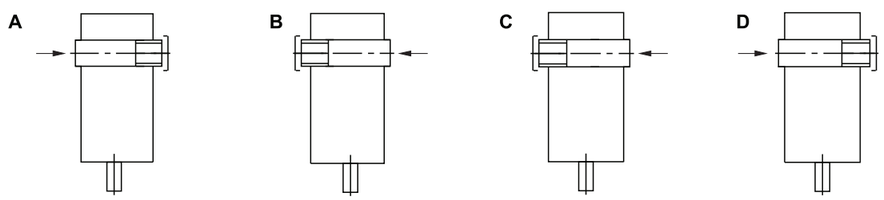

10.2.2 旋转方向关系

10.2.2 Direction of rotation

B2..H	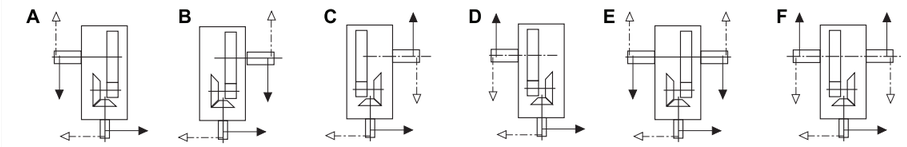
B2..V	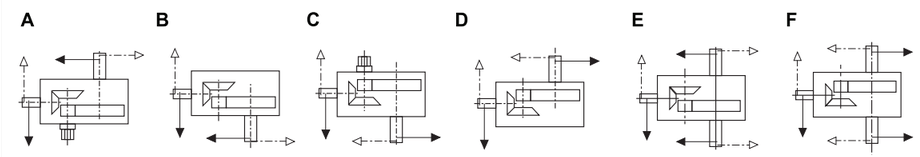
B3..H	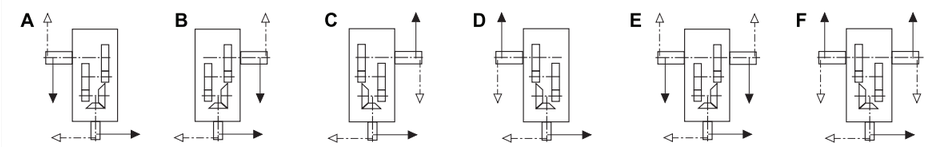
B3..V	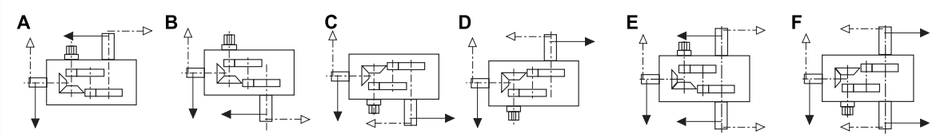
B4..H	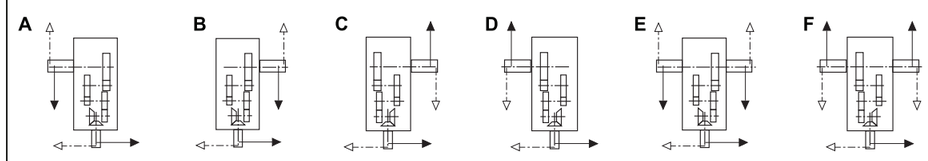
B4..V	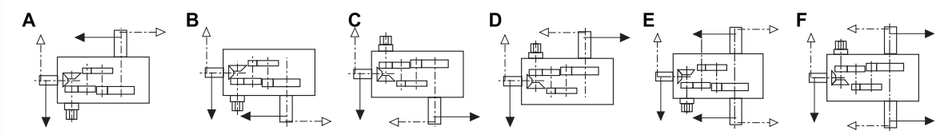

注：1.齿轮箱可双向运转,图中“⊞”为轴端油泵。
2.B2空心输出以及B2实心输出B/D/E/F布置形式时，不带轴端油泵和逆止器，若需安装，敬请垂询。

Note：1.Direction ofrofation is reversible," ⊞ " is shaft end oil pump.
2.Two stage reduction B series gear unit is not equipped with backstop and shaft end oil pump when solid andhollow output shaft assemblies is B/D/E/F, please consult us if shaft end oil pump and backstop are needed.

10.3 逆止器布置及轴旋转方向关系

10.3 Backstop assemblies and direction of shaft rotation direction

	A	B	C	D	E	F
H3...S H3...H H3...D H3...K	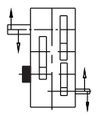	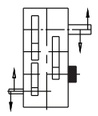	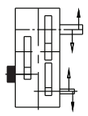	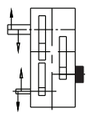	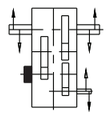	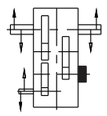
H4...S H4...H H4...D H4...K	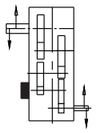	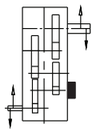	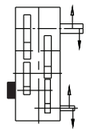	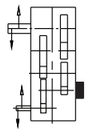	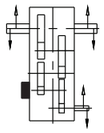	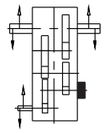
B2...S B2...H B2...D B2...K	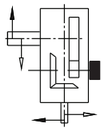		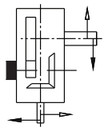			
B3...S B3...H B3...D B3...K	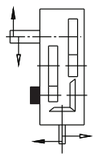	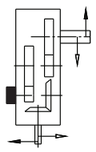	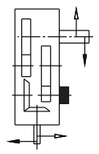	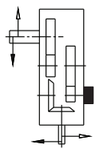	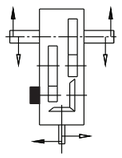	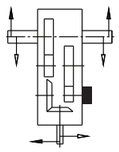
B4...S B4...H B4...D B4...K	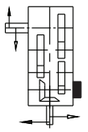	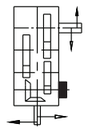	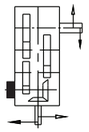	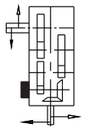	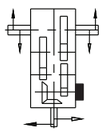	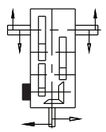

注：1.齿轮箱配逆止器只能单向运转，订货时需注明输出轴旋转方向。
2.H2系列不装逆止器。
3所有H/B系列轴端油泵与逆止器不共存若客户需同时安装，敬请垂询。

Note：1.Gearbox with backstop only makes unidirectional rotation. Output shaft rotation direction has to beindicated when peing ordered.
2.H2 series doesn't have backstop.
3.Shaft end oil pump can not be installed with backstop for all HB series, please consult us if both shaftend oil pump and backstop needed to be installed.

11 外型尺寸

H204H-H212H

11 Outline dimension

H204H-H212H

H2

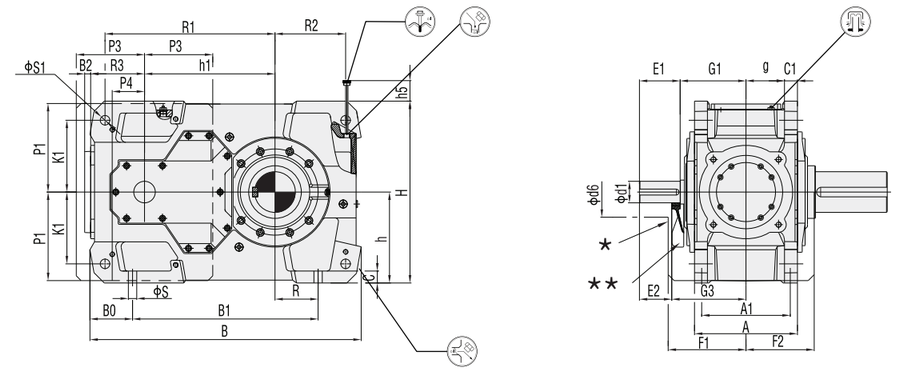

H2..HS
Parallel key solid shaft

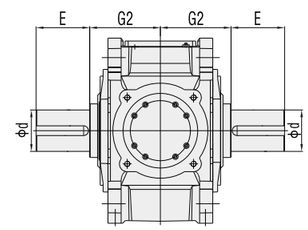

H2..HH
Parallel key hollow shaft

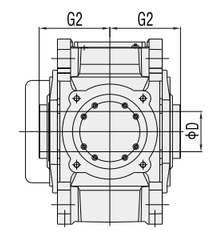

H2..HD
Hollow shaft with shrink disc

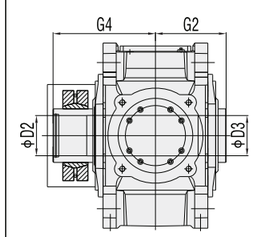

H2..HK
Hollow shaft with involute spline

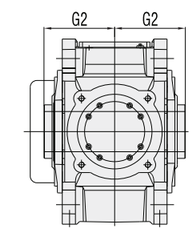

★ 风扇罩
★★ 冷却风扇(附件代号UF21)

★ Fan guard
★★ Cooling fan(Accessory code:UF21)

Size	i≤3.15(Size:04) i≤3.55(Size:06) i≤4(Size:08、09、11) i≤5.6(Size:12)			3.55≤i≤5.6(Size:04) 4≤i≤5.6(Size:06) 4.5≤i≤5.6(Size:08、09、11)			6.3≤i≤11.2			12.5≤i≤22.4			A	A1	B	B0	B1	B2	C	C1	d	d6	D	D2	D3	E
	d1	E1	E2	d1	E1	E2	d1	E1	E2	d1	E1	E2														
04	45k6	110	90	32k6	80	60	45k6	110	90	32k6	80	60	215	180	586	112	355	16	28	30±1	80m6	140	80H7	85H7	85H7	170
05	/	/	/	/	/	/	50k6	110	90	38k6	80	60	255	220	667	113	430	16	28	30±1	100m6	150	95H7	100H7	100H7	210
06	50k6	110	90	38k6	80	60	50k6	110	90	38k6	80	60	255	220	743	113	510	16	28	30±1	110m6	150	105H7	110H7	110H7	210
07	/	/	/	/	/	/	60m6	140	110	50k6	110	80	300	260	816	131	545	20	35	36±1	120m6	200	115H7	120H7	120H7	210
08	60m6	140	110	50k6	110	80	60m6	140	110	50k6	110	80	300	260	920	131	650	20	35	36±1	130m6	200	125H7	130H7	130H7	250
09	75m6	140	110	60m6	140	110	75m6	140	110	60m6	140	110	370	320	957	156	635	20	40	45±1.5	140m6	210	135H7	140H7	140H7	250
10	/	/	/	/	/	/	75m6	140	110	60m6	140	110	370	320	1062	156	735	20	40	45±1.5	160m6	210	150H7	150H7	150H7	300
11	90m6	170	135	70m6	140	105	90m6	170	135	70m6	140	105	430	370	1132	178	775	25	50	54±1.5	170m6	220	165H7	165H7	165H7	300
12	90m6	170	135	/	/	/	90m6	170	135	70m6	140	105	430	370	1292	178	930	25	50	54±1.5	180m6	220	180H7	180H7	180H7	300

Size	F1	F2	G1	G2	G3	G4	g	H	h	h1	h5	K1	P1	P3	P4	R	R1	R2	R3	S	S1	Weight (kg)
04	205	160	170	140	190	205	77.5	405	200	270	15	150	195	155	40	85	345	160	110	19	24H9	195
05	230	180	195	165	215	240	97.5	460	230	315	15	180	225	165	55	100	405	175	130	19	24H9	310
06	230	180	195	165	215	240	97.5	490	230	350	0	180	225	165	55	145	440	220	130	19	24H9	385
07	255	210	210	195	240	280	114	560	280	385	0	215	270	220	70	130	500	215	160	24	28H9	519
08	255	210	210	195	240	285	114	580	280	430	0	215	270	220	70	190	545	275	160	24	28H9	624
09	285	245	240	235	270	330	140	640	320	450	10	245	310	240	95	155	585	260	185	28	36H9	828
10	285	245	240	235	270	350	140	670	320	500	0	245	310	240	95	205	635	310	185	28	36H9	1044
11	325	285	275	270	310	400	161	760	380	545	30	300	370	285	125	180	710	295	225	35	40H9	1371
12	325	285	275	270	310	405	161	783	380	615	5	300	370	285	125	265	780	380	225	35	40H9	1644

H213H-H218H

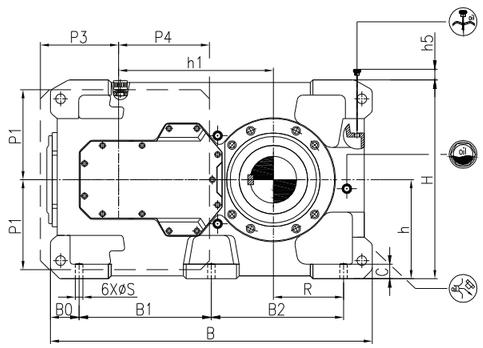

H213H-H218H

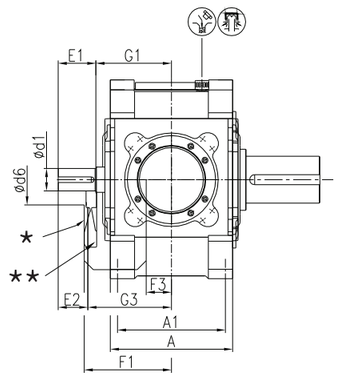

H2

H2..HS
Parallel key solid shaft

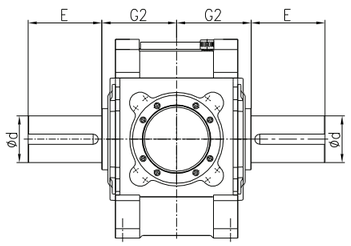

H2..HH
Parallel key hollow shaft

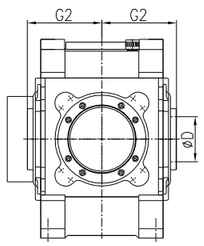

H2..HD
Hollow shaft with shrink disc

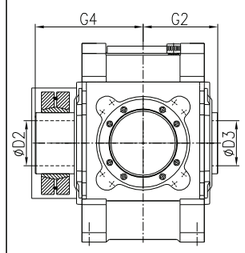

H2..HK
Hollow shaft with involute spline

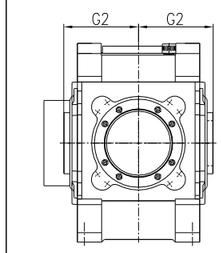

★ 风扇罩
★★ 冷却风扇(附件代号UF21)

★ Fan guard
★★ Cooling fan(Accessory code:UF21)

Size	iN=3.15-11.2			iN=3.15-12.5			iN=12.5-20			iN=14-20			A	A1	B	B0	B1	B2
	d1	E1	E2	d1	E1	E2	d1	E1	E2	d1	E1	E2						
13	100m6	210	175				85m6	170	135				545	475	1375	142	545	545
14	100m6	210	175				85m6	170	135				545	475	1505	137	545	685
15	120m6	210	175				100m6	210	175				620	535	1630	160	655	655
16	120m6	210	175				100m6	210	175				620	535	1720	160	655	745
17	125m6	210	165				110m6	210	165				680	600	1790	160	735	735
18				125m6	210	165				110m6	210	165	680	600	1910	160	735	855

Size	C	d	d6	D	D2	D3	E	F1	F3	G1	G2	G3	G4	H	h	h1	h5	P1	P3	P4	R	S	Weight(kg)
13	60	200m6	250	190H7	190H7	190H7	350	385	135	330	335	365	480	875	440	635	40	400	330	365	305	35	2075
14	60	220m6	250	210H7	210H7	210H7	350	385	135	330	335	365	480	940	440	705	40	400	330	365	375	35	2825
15	70	240m6	280	230H7	230H7	230H7	410	430	155	365	380	400	550	1000	500	762	40	450	370	440	365	42	3610
16	70	250m6	280	240H7	240H7	240H7	410	430	155	365	380	400	550	1035	500	808	40	450	370	440	410	42	3970
17	80	260n6	280	250H7	250H7	250H7	410	485	140	420	415	465	600	1105	550	860	60	500	435	505	390	42	4765
18	80	280n6	280	275H7	280H7	280H7	470	485	140	420	415	465	600	1110	550	920	60	500	435	505	450	42	5265

H219H~H226H

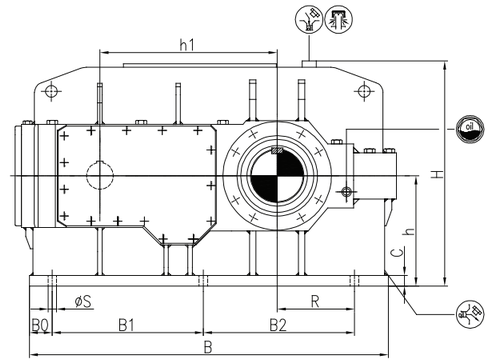

H219H~H226H

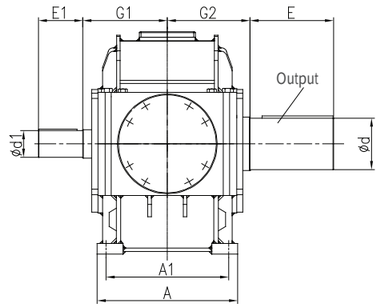

H2

Size	iN=8~10		iN=9~11.2		iN=10		iN=11.2~18		iN=12.5~20		A	A1	B
	d1	E1	d1	E1	d1	E1	d1	E1	d1	E1			
19	150m6	250					120m6	210			790	690	2010
20			150m6	250					120m6	210	790	690	2130
21	170m6	300					140m6	250			830	720	2150
22			170m6	300					140m6	250	830	720	2260
23	190m6	350					150m6	250			930	810	2400
24			190m6	350					150m6	250	930	810	2540
25					200m6	350	170m6	300			1050	910	2695
26					200m6	350	170m6	300			1050	910	2855

Size	B0	B1	B2	C	d	E	G1	G2	H	h	h1	R	S	Weight (kg)
19	120	850	850	60	290n6	470	475	465	1270	620	997	435	48	6750
20	120	850	970	60	310n6	470	475	465	1270	620	1057	495	48	7750
21	155	900	900	70	330n6	550	495	490	1425	700	1067	485	56	9400
22	155	900	1010	70	350n6	550	495	490	1425	700	1122	540	56	10200
23	155	1010	1010	80	370n6	550	560	540	1565	780	1185	550	56	12500
24	155	1010	1140	80	390n6	650	560	540	1565	780	1250	615	56	14000
25	230	1090	1090	90	410n6	650	600	605	1785	860	1325	590	66	16800
26	230	1090	1270	90	430n6	650	600	605	1785	860	1415	680	66	18600

H305H-H312H

H3

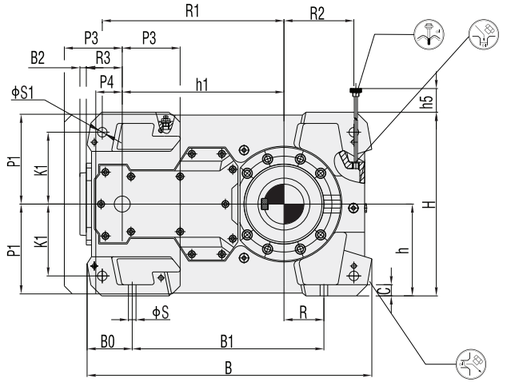

H305H-H312H

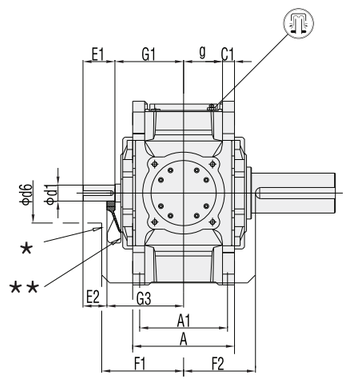

H3..HS
Parallel key solid shaft

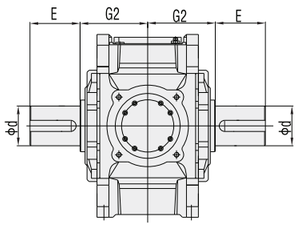

H3..HH
Parallel key hollow shaft

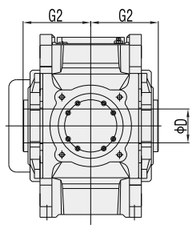

H3..HD
Hollow shaft with shrink disc

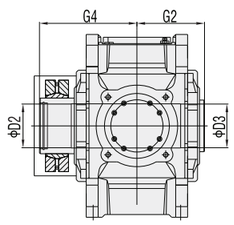

H3..HK
Hollow shaft with involute spline

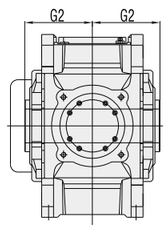

★ 风扇罩
★★ 冷却风扇(附件代号UF21)

★ Fan guard
★★ Cooling fan(Accessory code:UF21)

Size	iN ≤ 45			iN ≤ 50			iN ≥ 50			iN ≥ 56			A	A1	B	B0	B1	B2	C	C1	d	d6	D	D2	D3
	d1	E1	E2	d1	E1	E2	d1	E1	E2	d1	E1	E2													
05	40k6	80	60				30k6	60	40				255	220	713	113	480	16	28	30 ± 1	100m6	150	95H7	100H7	100H7
06	40k6	80	60				30k6	60	40				255	220	793	113	560	16	28	30 ± 1	110m6	150	105H7	110H7	110H7
07				45k6	110	80				35k6	80	50	300	260	876	131	605	16	35	36 ± 1	120m6	200	115H7	120H7	120H7
08				45k6	110	80				35k6	80	50	300	260	981	131	710	16	35	36 ± 1	130m6	200	125H7	130H7	130H7
09				60m6	140	110				45k6	110	80	370	320	1033	156	710	20	40	45±1.5	140m6	210	135H7	140H7	140H7
10				60m6	140	110				45k6	110	80	370	320	1131	156	810	20	40	45±1.5	160m6	210	150H7	150H7	150H7
11				70m6	140	105				50k6	110	75	430	370	1227	178	870	20	50	54±1.5	170m6	220	165H7	165H7	165H7
12				70m6	140	105				50k6	110	75	430	370	1382	178	1025	20	50	54±1.5	180m6	220	180H7	180H7	180H7

Size	E	F1	F2	G1	G2	G3	G4	g	H	h	h1	h5	K1	P1	P3	P4	R	R1	R2	R3	S	S1	Weight (kg)
05	210	205	180	170	165	190	240	97.5	460	230	405	40	180	225	145	55	100	455	175	90	19	24H9	324
06	210	205	180	170	165	190	240	97.5	490	230	440	10	180	225	145	55	145	490	220	90	19	24H9	403
07	210	255	210	210	195	240	280	114	560	280	495	0	215	270	220	70	130	560	215	110	24	28H9	558
08	250	255	210	210	195	240	285	114	580	280	540	0	215	270	220	70	190	605	275	110	24	28H9	663
09	250	285	245	240	235	270	330	140	640	320	580	15	245	310	240	95	155	660	260	130	28	36H9	899
10	300	285	245	240	235	270	350	140	670	320	630	0	245	310	240	95	205	710	310	130	28	36H9	1113
11	300	325	285	275	270	310	400	161	760	380	705	30	300	370	285	125	180	805	295	160	35	40H9	1481
12	300	325	285	275	270	310	405	161	783	380	775	5	300	370	285	125	265	875	380	160	35	40H9	1742

H313H-H318H

H3

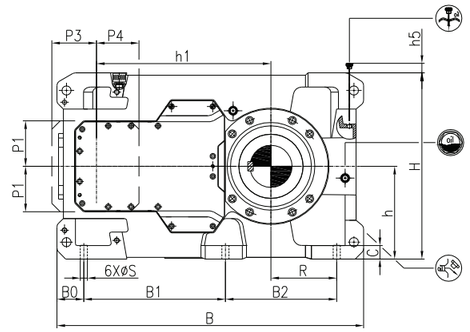

H313H-H318H

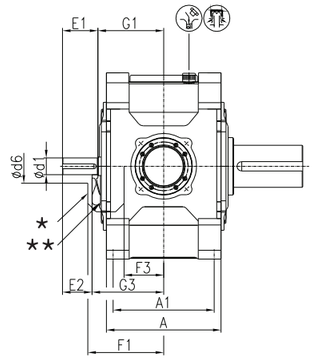

H3..HS
Parallel key solid shaft

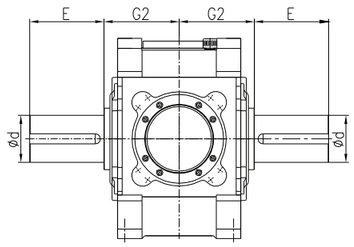

H3..HH
Parallel key hollow shaft

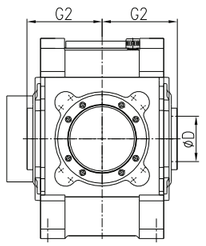

H3..HD
Hollow shaft with shrink disc

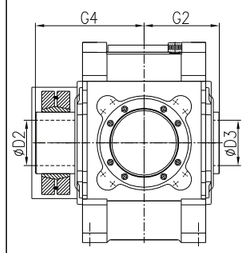

H3..HK
Hollow shaft with involute spline

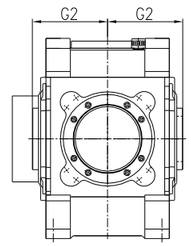

★ 风扇罩
★★ 冷却风扇(附件代号UF21)

★ Fan guard
★★ Cooling fan(Accessory code:UF21)

Size	iN=14-45			iN=16-50			iN=50-100			iN=56-100			iN=56-112			A	A1	B	B0	B1	B2	C
	d1	E1	E2	d1	E1	E2	d1	E1	E2	d1	E1	E2	d1	E1	E2							
13				85m6	170	130				60m6	140	100				545	475	1470	137	667.5	527.5	60
14				85m6	170	130				60m6	140	100				545	475	1610	137	667.5	667.5	60
15				100m6	210	165							75m6	140	95	620	535	1760	161	840	600	70
16				100m6	210	165							75m6	140	95	620	535	1850	160	840	690	70
17	100m6	210	165				75m6	140	95							680	600	1820	160	840	660	80
18				100m6	210	165							75m6	140	95	680	600	1940	160	840	780	80

Size	d	d6	D	D2	D3	E	F1	F3	G1	G2	G3	G4	H	h	h1	h5	P1	P3	P4	R	S	Weight (kg)
13	200m6	190	190H7	190H7	190H7	350	370	195	325	335	365	480	875	440	820	0	225	225	215	305	35	2450
14	220m6	190	210H7	210H7	210H7	350	370	195	325	335	365	480	940	440	890	40	225	225	215	375	35	2880
15	240m6	200	230H7	230H7	230H7	410	415	205	365	380	410	550	1000	500	987	60	270	265	252	365	42	3640
16	250m6	200	240H7	240H7	240H7	410	415	205	365	380	410	550	1035	500	1033	20	270	265	252	410	42	4195
17	260n6	200	250H7	250H7	250H7	410	450	235	400	415	445	600	1105	550	1035	60	270	265	252	390	42	4670
18	280n6	200	275H7	280H7	280H7	470	450	235	400	415	445	600	1110	550	1095	70	270	265	252	450	42	5165

H319H~H326H H319H~H326H

H3

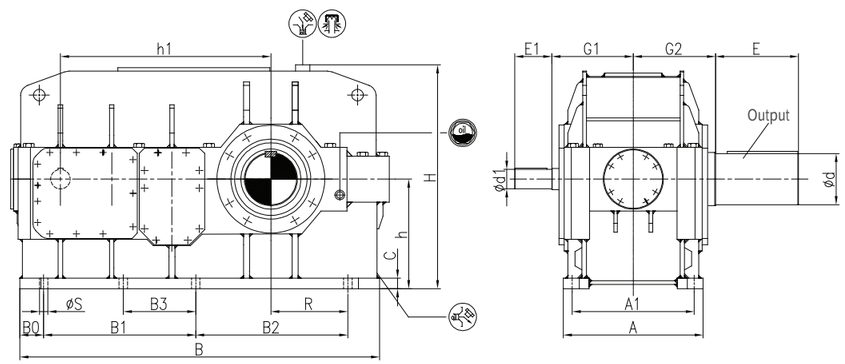

Size	iN=16~45		iN=16~50		iN=18~45		iN=18~50		iN=20~50		iN=50~71		iN=50~80		iN=56~80		iN=56~90	
	d1	E1	d1	E1	d1	E1	d1	E1	d1	E1	d1	E1	d1	E1	d1	E1	d1	E1
19	110m6	210											90m6	170				
20			110m6	210													90m6	170
21					130m6	250					110m6	210						
22									130m6	250					110m6	210		
23					130m6	250					110m6	210						
24									130m6	250					110m6	210		
25							150m6	250							130m6	250		
26							150m6	250							130m6	250		

Size	A	A1	B	B0	B1	B2	B3	C	d	E	G1	G2	H	h	h1	R	S	Weight (kg)
19	790	690	2035	135	860	860	/	60	290n6	470	440	465	1270	620	1190	435	48	6700
20	790	690	2165	135	860	980	/	60	310n6	470	440	465	1270	620	1250	495	48	8200
21	830	720	2375	155	1000	1000	/	70	330n6	550	470	490	1425	700	1387	485	56	9600
22	830	720	2465	155	1000	1110	/	70	350n6	550	470	490	1425	700	1442	540	56	10400
23	930	810	2560	180	1185	985	545	80	370n6	550	515	540	1565	780	1505	550	56	12400
24	930	810	2715	180	1185	1115	545	80	390n6	650	515	540	1565	780	1570	615	56	14500
25	1050	910	2890	175	1350	1080	640	90	410n6	650	580	605	1785	860	1695	590	66	17400
26	1050	910	3050	175	1350	1260	565	90	430n6	650	580	605	1785	860	1785	680	66	19000

H407H~H412H H407H~H412H

H4

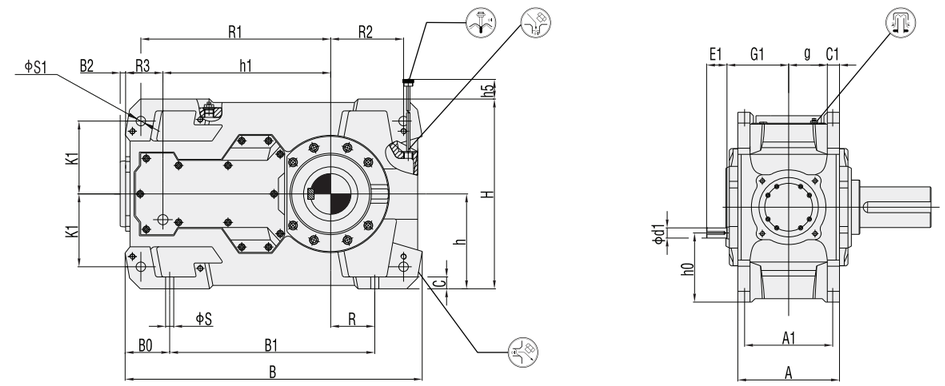

H4..HS
Parallel key solid shaft

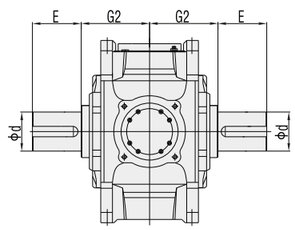

H4..HH
Parallel key hollow shaft

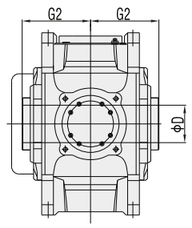

H4..HD
Hollow shaft with shrink disc

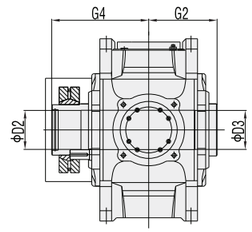

H4..HK
Hollow shaft with involute spline

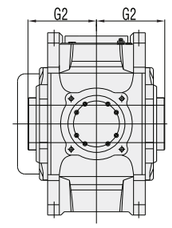

Size	iN ≤ 200		iN ≤ 224		iN ≥ 224		iN ≥ 250		A	A1	B	B0	B1	B2	C	C1	d	D	D2	D3
	d1	E1	d1	E1	d1	E1	d1	E1												
07	30k6	60			24k6	50			300	260	876	131	605	16	35	36±1	120m6	115H7	120H7	120H7
08	30k6	60			24k6	50			300	260	981	131	710	16	35	36±1	130m6	125H7	130H7	130H7
09	35k6	80			28k6	60			370	320	1033	156	710	20	40	45±1.5	140m6	135H7	140H7	140H7
10	35k6	80			28k6	60			370	320	1131	156	810	20	40	45±1.5	160m6	150H7	150H7	150H7
11			45k6	110			32k6	80	430	370	1227	178	870	20	50	54±1.5	170m6	165H7	165H7	165H7
12			45k6	110			32k6	80	430	370	1382	178	1025	20	50	54±1.5	180m6	180H7	180H7	180H7

Size	E	G1	G2	G4	g	H	h	h0	h1	h5	K1	R	R1	R2	R3	S	S1	Weight (kg)
07	210	180	195	280	114	560	280	204	495	0	215	130	560	215	110	24	28H9	559
08	250	180	195	285	114	580	280	204	540	0	215	190	605	275	110	24	28H9	664
09	250	215	235	330	140	640	320	226.5	580	15	245	155	660	260	130	28	36H9	901
10	300	215	235	350	140	670	320	226.5	630	0	245	205	710	310	130	28	36H9	1115
11	300	250	270	400	161	760	380	260	705	30	300	180	805	295	160	35	40H9	1487
12	300	250	270	405	161	783	380	260	775	5	300	265	875	380	160	35	40H9	1747

H413H-H418H

H4

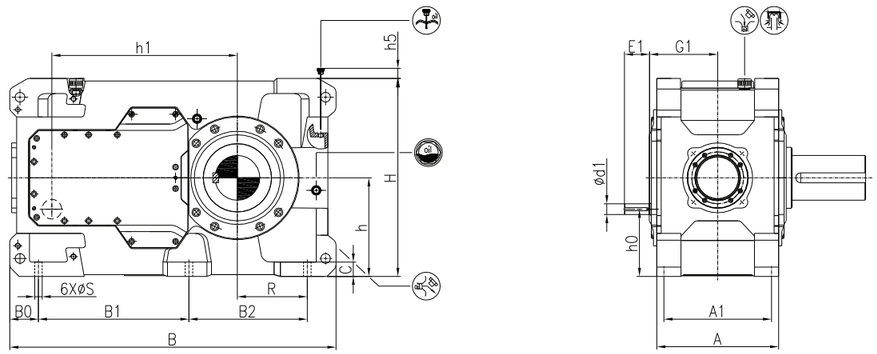

H4..HS
Parallel key solid shaft

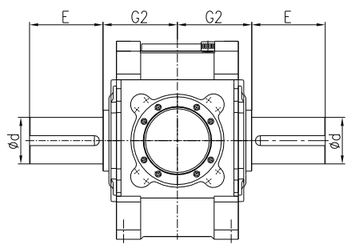

H4..HH
Parallel key hollow shaft

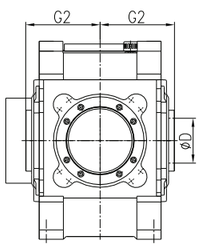

H4..HD
Hollow shaft with shrink disc

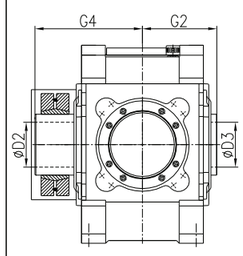

H4..HK
Hollow shaft with involute spline

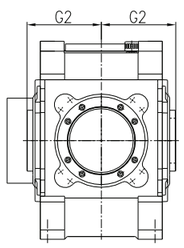

Size	iN=63-200		iN=71-224		iN=224-400		iN=250-450		A	A1	B	B0	B1	B2	C	d
	d1	E1	d1	E1	d1	E1	d1	E1								
13			50k6	110			38k6	80	545	475	1470	137	667.5	527.5	60	200m6
14			50k6	110			38k6	80	545	475	1610	137	667.5	667.5	60	220m6
15			60m6	140			50k6	110	620	535	1760	161	840	600	70	240m6
16			60m6	140			50k6	110	620	535	1850	160	840	690	70	250m6
17	60m6	140			50k6	110			680	600	1820	160	840	660	80	260n6
18			60m6	140			50k6	110	680	600	1940	160	840	780	80	280n6

Size	D	D2	D3	E	G1	G2	G4	H	h	h0	h1	h5	R	S	Weight(kg)
13	190H7	190H7	190H7	350	305	335	480	875	440	300	820	0	305	35	2450
14	210H7	210H7	210H7	350	305	335	480	940	440	300	890	40	375	35	2995
15	230H7	230H7	230H7	410	345	380	550	1000	500	325	987	60	365	42	3810
16	240H7	240H7	240H7	410	345	380	550	1035	500	325	1033	20	410	42	4290
17	250H7	250H7	250H7	410	380	415	600	1105	550	375	1035	60	390	42	4795
18	275H7	280H7	280H7	470	380	415	600	1110	550	375	1095	70	450	42	5325

H419H~H426H

H4

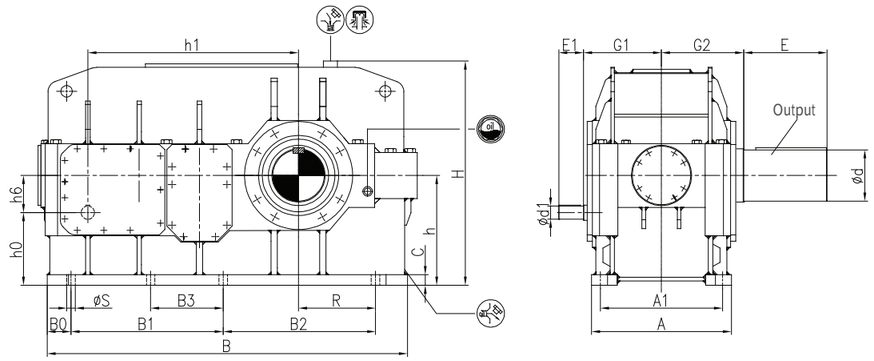

Size	iN=63~200		iN=71~200		iN=71~224		iN=224~355		iN=224~400		iN=250~450		A	A1	B	B0
	d1	E1	d1	E1	d1	E1	d1	E1	d1	E1	d1	E1				
19			75m6	140					60m6	140			790	690	2035	135
20					75m6	140					60m6	140	790	690	2165	135
21			90m6	170					70m6	140			830	720	2375	155
22					90m6	170					70m6	140	830	720	2465	155
23	90m6	170							70m6	140			930	810	2560	180
24					90m6	170					70m6	140	930	810	2715	180
25	100m6	210					85m6	170					1050	910	2890	175
26	100m6	210					85m6	170					1050	910	3050	175

Size	B1	B2	B3	C	d	E	G1	G2	H	h	h0	h1	h6	R	S	Weight (kg)
19	860	860	/	60	290n6	470	440	465	1270	620	410	1190	210	435	48	6800
20	860	980	/	60	310n6	470	440	465	1270	620	410	1250	210	495	48	8300
21	1000	1000	/	70	330n6	550	460	490	1425	700	444	1387	256	485	56	9700
22	1000	1110	/	70	350n6	550	460	490	1425	700	444	1442	256	540	56	10500
23	1185	985	545	80	370n6	550	505	540	1565	780	524	1505	256	550	56	12600
24	1185	1115	545	80	390n6	650	505	540	1565	780	524	1570	256	615	56	14600
25	1350	1080	640	90	410n6	650	565	605	1785	860	568	1695	292	590	66	17400
26	1350	1260	565	90	430n6	650	565	605	1785	860	568	1785	292	680	66	19000

B204H-B212H

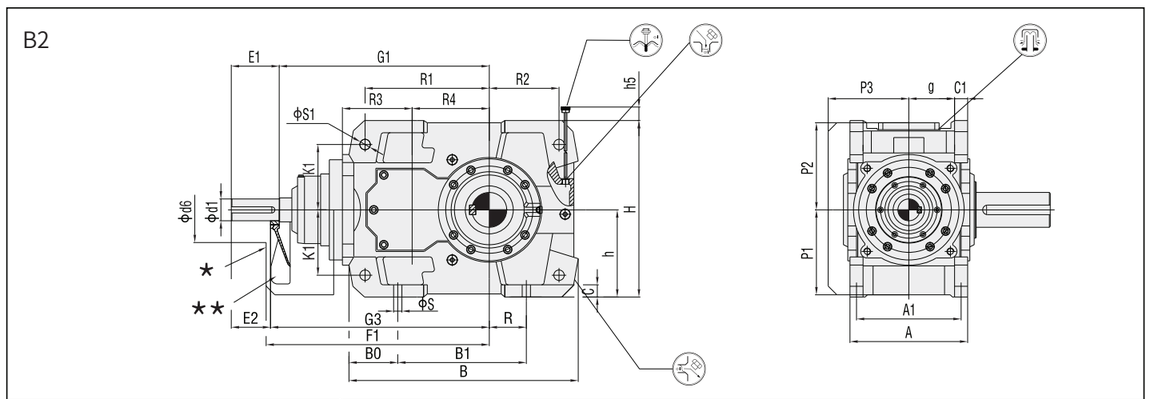

B2..HS
Parallel key solid shaft

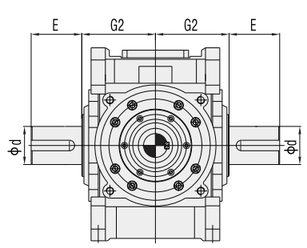

B2..HH
Parallel key hollow shaft

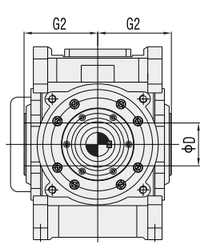

B2..HD
Hollow shaft with shrink disc

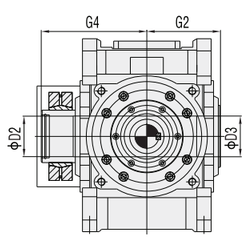

B2..HK
Hollow shaft with involute spline

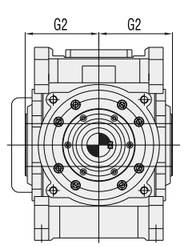

★ 风扇罩
★★ 冷却风扇(附件代号UF21)

★ Fan guard
★★ Cooling fan(Accessory code:UF21)

Size	iN ≤ 14			A	A1	B	B0	B1	C	C1	d	d6	D	D2	D3	E	F1
	d1	E1	E2														
04	50k6	110	90	270	235	530	125	295	28	30 ± 1	80m6	150	80H7	85H7	85H7	170	517
05	60m6	140	110	320	285	595	130	355	28	30 ± 1	100m6	160	95H7	100H7	100H7	210	596
06	60m6	140	110	320	285	680	135	435	28	30 ± 1	110m6	160	105H7	110H7	110H7	210	635
07	75m6	140	110	380	340	725	145	450	35	36 ± 1	120m6	210	115H7	120H7	120H7	210	705
08	75m6	140	110	380	340	825	140	555	35	36 ± 1	130m6	210	125H7	130H7	130H7	250	745
09	85m6	170	135	440	390	860	175	530	40	48 ± 1 5	140m6	220	135H7	140H7	140H7	250	805
10	85m6	170	135	440	390	970	185	630	40	48 ± 1.5	160m6	220	150H7	150H7	150H7	300	865
11	95m6	170	135	530	470	1030	205	645	50	54 ± 1·5	170m6	250	165H7	165H7	165H7	300	1005
12	95m6	170	135	530	470	1165	185	800	50	54 ± 1.5	180m6	250	180H7	180H7	180H7	300	1055

Size	G1	G2	G3	G4	g	H	h	h5	K1	P1	P2	P3	R	R1	R2	R3	R4	S	S1H9	Weight (kg)
04	482	140	502	205	105	400	200	15	150	195	200	185	85	285	160	160	177	19	24H9	217
05	551	165	581	240	130	460	230	30	180	220	235	215	100	330	175	185	201	19	24H9	349
06	590	165	620	240	130	490	230	0	180	220	235	215	145	365	220	185	240	19	24H9	437
07	660	195	690	280	154	560	280	35	215	270	285	250	130	405	215	225	240	24	28H9	599
08	700	195	730	285	154	580	280	25	215	270	285	250	190	450	275	225	280	24	28H9	723
09	755	235	790	330	172	640	320	10	245	310	325	250	155	480	260	265	280	28	36H9	921
10	815	235	850	350	172	670	320	0	245	310	325	250	205	530	310	265	340	28	36H9	1158
11	945	270	980	400	211	760	380	55	300	370	385	330	180	580	295	320	340	35	40H9	1516
12	995	270	1030	405	211	783	380	30	300	370	385	330	265	650	380	320	390	35	40H9	1833

B213H-B218H

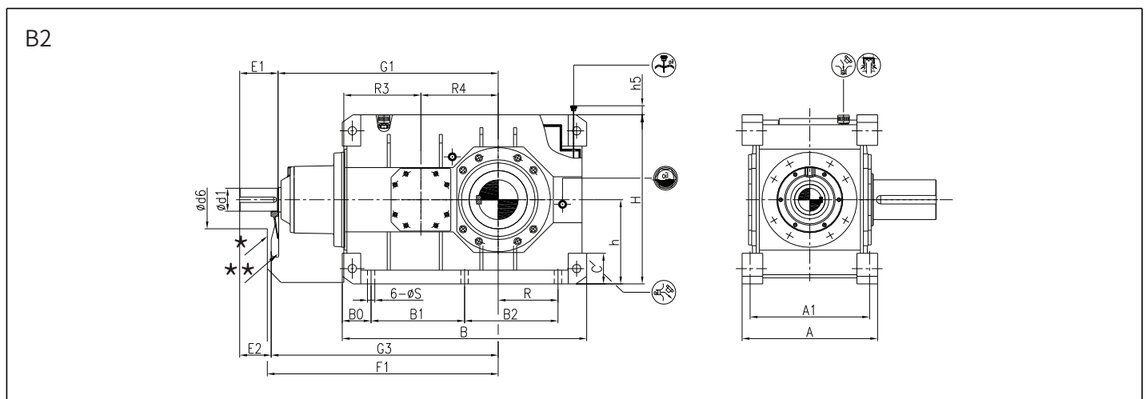

B2..HS
Parallel key solid shaft

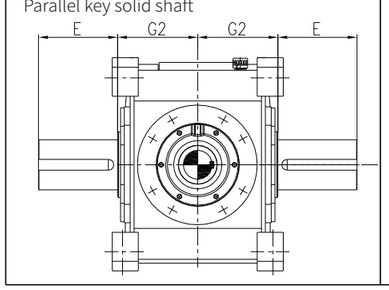

B2..HH
Parallel key hollow shaft

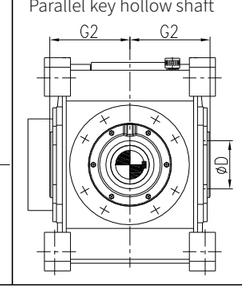

B2..HD
Hollow shaft with shrink disc

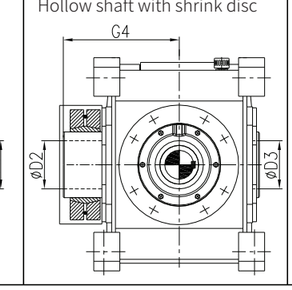

B2..HK
Hollow shaft with involute spline

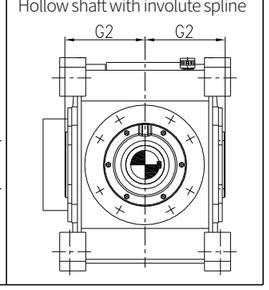

★ 风扇罩
★★ 冷却风扇(附件代号UF21)

★ Fan guard
★★ Cooling fan(Accessory code:UF21)

Size	iN=6.3-14			iN=7.1-14			A	A1	B	B0	B1	B2	C	d	d6	D	D2	D3
	d1	E1	E2	d1	E1	E2												
13	115m6	210	175				655	580	1205	137	465	465	60	200m6	245	190H7	190H7	190H7
14	115m6	210	175				655	580	1345	137	465	605	60	220m6	245	210H7	210H7	210H7
15	140m6	250	200				765	670	1430	160	555	555	70	240m6	280	230H7	230H7	230H7
16	140m6	250	200				765	670	1520	160	555	645	70	250m6	280	240H7	240H7	240H7
17	150m6	250	200				885	780	1595	188	610	610	80	260n6	380	250H7	250H7	250H7
18				150m6	250	200	885	780	1715	188	610	730	80	280n6	380	275H7	280H7	280H7

Size	E	F1	G1	G2	G3	G4	H	h	h5	P1	P2	P3	R	R3	R4	S	Weight (kg)
13	350	1175	1092	335	1127	480	870	440	60	430	450	375	305	370	392	35	2530
14	350	1245	1170	335	1205	480	885	440	20	430	450	375	375	370	470	35	2945
15	410	1385	1305	380	1355	550	1000	500	20	490	495	435	365	442	470	42	4230
16	410	1430	1330	380	1380	550	1035	500	60	490	495	435	410	442	495	42	4750
17	410	1520	1450	415	1500	600	1105	550	40	540	555	505	390	490	505	48	5990
18	470	1580	1515	415	1565	600	1110	550	100	540	555	505	450	490	570	48	6555

B304H-B312H

B3

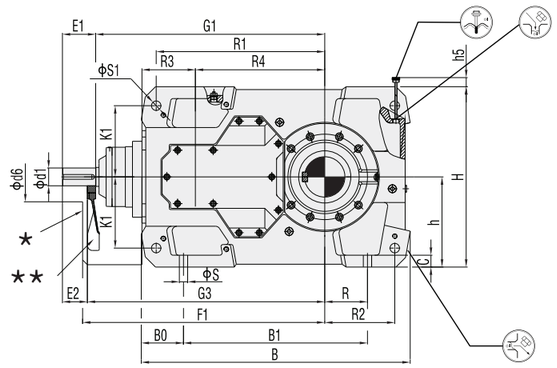

B304H-B312H

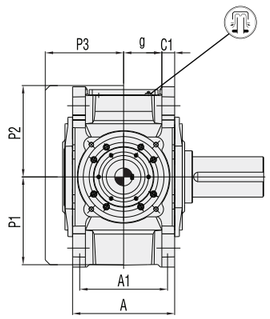

B3..HS
Parallel key solid shaft

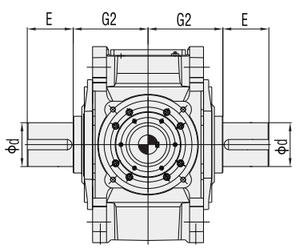

B3..HH
Parallel key hollow shaft

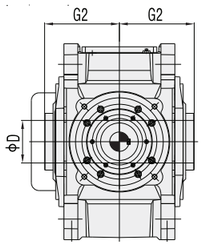

B3..HD
Hollow shaft with shrink disc

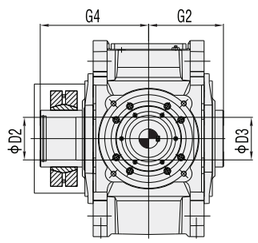

B3..HK
Hollow shaft with involute spline

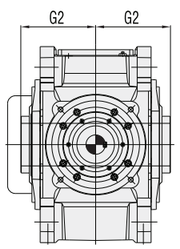

★ 风扇罩
★★ 冷却风扇(附件代号UF21)

★ Fan guard
★★ Cooling fan(Accessory code:UF21)

Size	iN ≤ 63			iN ≥ 71			A	A1	B	B0	B1	C	C1	d	d6	E	F1	D	D2	D3
	d1	E1	E2	d1	E1	E2														
04	35k6	80	60	30k6	60	40	215	180	586	112	355	28	30 ± 1	80m6	150	170	530	80H7	85H7	85H7
05	45k6	110	80	35k6	80	50	255	220	667	113	430	28	30 ± 1	100m6	160	210	620	95H7	100H7	100H7
06	45k6	110	80	35k6	80	50	255	220	743	113	510	28	30 ± 1	110m6	160	210	655	105H7	110H7	110H7
07	50k6	110	90	40k6	80	60	300	260	816	131	545	35	36 ± 1	120m6	210	210	720	115H7	120H7	120H7
08	50k6	110	90	40k6	80	60	300	260	920	131	650	35	36 ± 1	130m6	210	250	765	125H7	130H7	130H7
09	60m6	140	110	50k6	110	80	370	320	957	156	635	40	45±1.5	140m6	220	250	845	135H7	140H7	140H7
10	60m6	140	110	50k6	110	80	370	320	1062	156	735	40	45±1.5	160m6	220	300	895	150H7	150H7	150H7
11	75m6	140	115	60m6	140	115	430	370	1132	178	775	50	54±1.5	170m6	210	300	1010	165H7	165H7	165H7
12	75m6	140	115	60m6	140	115	430	370	1292	178	930	50	54±1.5	180m6	210	300	1080	180H7	180H7	180H7

Size	G1	G2	G3	G4	g	H	h	h5	K1	P1	P2	P3	R	R1	R2	R3	R4	S	S1	Weight (kg)
04	500	140	520	205	77.5	400	200	15	150	195	200	185	85	345	160	110	270	19	24H9	210
05	575	165	605	240	97.5	460	230	15	180	220	235	215	100	405	175	130	315	19	24H9	337
06	610	165	640	240	97.5	490	230	0	180	220	235	215	145	440	220	130	350	19	24H9	412
07	690	195	710	280	114	560	280	0	215	270	285	250	130	500	215	160	385	24	28H9	555
08	735	195	755	285	114	580	280	0	215	270	285	250	190	545	275	160	430	24	28H9	660
09	800	235	830	330	140	640	320	10	245	310	325	250	155	585	260	185	450	28	36H9	891
10	850	235	880	350	140	670	320	0	245	310	325	250	205	635	310	185	500	28	36H9	1106
11	965	270	990	400	161	760	380	30	300	370	385	330	180	710	295	225	545	35	40H9	1484
12	1035	270	1060	405	161	783	380	5	300	370	385	330	265	780	380	225	615	35	40H9	1757

B313H-B318H

B3

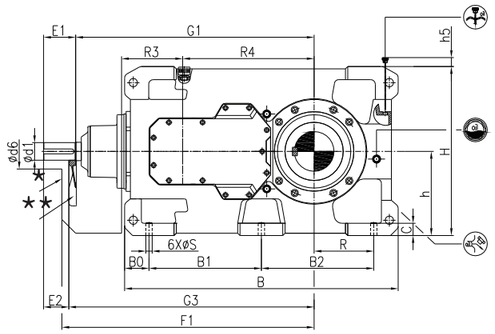

B313H-B318H

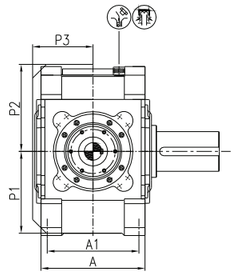

B3..HS
Parallel key solid shaft

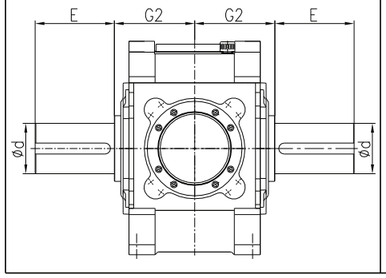

B3..HH
Parallel key hollow shaft

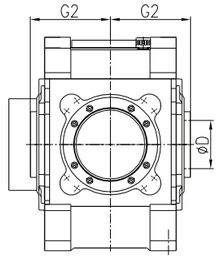

B3..HD
Hollow shaft with shrink disc

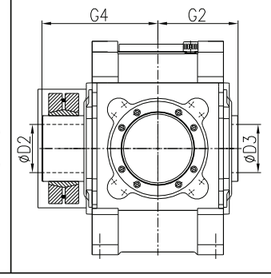

B3..HK
Hollow shaft with involute spline

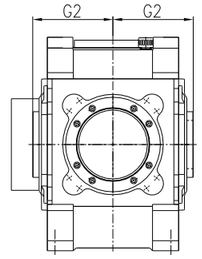

★ 风扇罩
★★ 冷却风扇(附件代号UF21)

★ Fan guard
★★ Cooling fan(Accessory code:UF21)

Size	iN=16-56			iN=16-63			iN=63-80			iN=71-90			A	A1	B	B0	B1	B2	C	d	d6
	d1	E1	E2	d1	E1	E2	d1	E1	E2	d1	E1	E2									
13				85m6	170	135				70m6	140	105	545	475	1375	142	545	545	60	200m6	210
14				85m6	170	135				70m6	140	105	545	475	1505	137	545	685	60	220m6	210
15				95m6	170	135				75m6	140	105	620	535	1630	160	655	655	70	240m6	210
16				95m6	170	135				75m6	140	105	620	535	1720	160	655	745	70	250m6	210
17	115m6	210	175				90m6	170	135				680	600	1790	160	735	735	80	260n6	230
18				115m6	210	175				90m6	170	135	680	600	1910	160	735	855	80	280n6	230

Size	D	D2	D3	E	F1	G1	G2	G3	G4	H	h	h5	P1	P2	P3	R	R3	R4	S	Weight (kg)
13	190H7	190H7	190H7	350	1165	1110	335	1145	480	875	440	40	425	435	325	305	265	635	35	2470
14	210H7	210H7	210H7	350	1235	1180	335	1215	480	940	440	40	425	435	325	375	265	705	35	3025
15	230H7	230H7	230H7	410	1420	1367	380	1402	550	1000	500	40	485	520	365	365	320	762	42	3925
16	240H7	240H7	240H7	410	1470	1413	380	1448	550	1035	500	40	485	520	365	410	320	808	42	4295
17	250H7	250H7	250H7	410	1620	1560	415	1595	600	1105	550	60	535	570	395	390	370	860	42	5110
18	275H7	280H7	280H7	470	1680	1620	415	1655	600	1110	550	60	535	570	395	450	370	920	42	5645

B319H~B326H

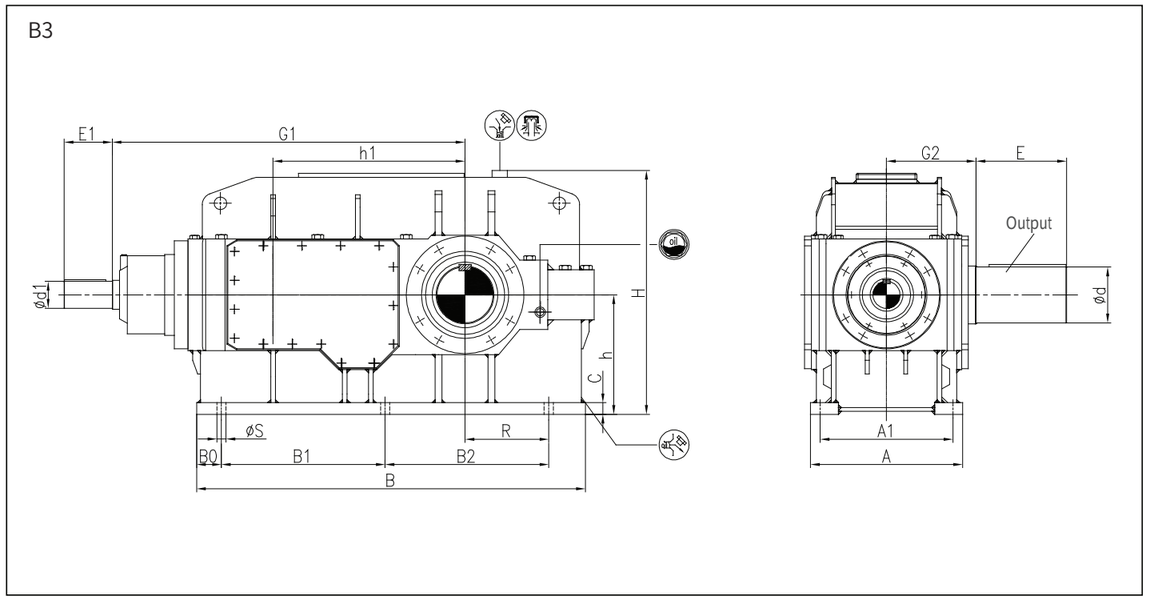

Size	iN=16~56		iN=16~63		iN=18~56		iN=20~56		iN=20~63		iN=22.4~56		iN=22.4~63		iN=63~80		iN=63~90		iN=71~90	
	d1	E1	d1	E1	d1	E1	d1	E1	d1	E1	d1	E1	d1	E1	d1	E1	d1	E1	d1	E1
19	140m6	250															110m6	210		
20			140m6	250															110m6	210
21					140m6	250											110m6	210		
22									140m6	250									110m6	210
23							150m6	250							115m6	210				
24													150m6	250					115m6	210
25											170m6	300			130m6	250				
26											170m6	300			130m6	250				

Size	A	A1	B	B0	B1	B2	C	d	E	G1	G2	H	h	h1	R	S	Weight (kg)
19	790	690	2010	120	850	850	60	290n6	470	1832	465	1270	620	997	435	48	7200
20	790	690	2130	120	850	970	60	310n6	470	1892	465	1270	620	1057	495	48	8500
21	830	720	2150	155	900	900	70	330n6	550	1902	490	1425	700	1067	485	56	9900
22	830	720	2260	155	900	1010	70	350n6	550	1957	490	1425	700	1122	540	56	10500
23	930	810	2400	155	1010	1010	80	370n6	550	2130	540	1565	780	1185	550	56	12500
24	930	810	2540	155	1010	1140	80	390n6	650	2195	540	1565	780	1250	615	56	14500
25	1050	910	2695	230	1090	1090	90	410n6	650	2375	605	1785	860	1325	590	66	17300
26	1050	910	2855	230	1090	1270	90	430n6	650	2465	605	1785	860	1415	680	66	19000

B405H~B412H

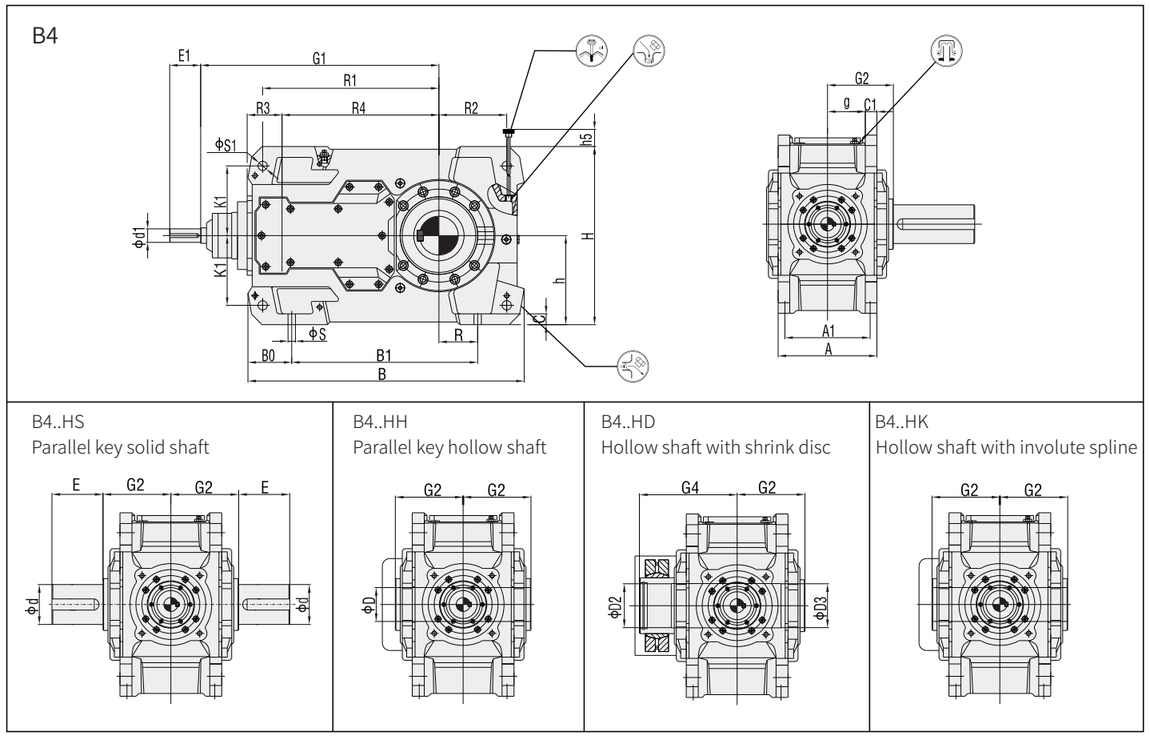

Size	iN ≤ 250		iN ≤ 280		iN ≥ 280		iN ≥ 315		A	A1	B	B0	B1	C	C1	d	D
	d1	E1	d1	E1	d1	E1	d1	E1									
05			35k6	80			25k6	50	255	220	713	113	480	28	30 ± 1	100m6	95H7
06			35k6	80			25k6	50	255	220	793	113	560	28	30 ± 1	110m6	105H7
07			35k6	80			30k6	60	300	260	876	131	605	35	36 ± 1	120m6	115H7
08			35k6	80			30k6	60	300	260	981	131	710	35	36 ± 1	130m6	125H7
09	45k6	110			35k6	80			370	320	1033	156	710	40	45±1.5	140m6	135H7
10	45k6	110			35k6	80			370	320	1131	156	810	40	45±1.5	160m6	150H7
11			50k6	110			40k6	80	430	370	1227	178	870	50	54±1.5	170m6	165H7
12			50k6	110			40k6	80	430	370	1382	178	1025	50	54±1.5	180m6	180H7

Size	D2	D3	E	G1	G2	G4	g	H	h	h5	K1	R	R1	R2	R3	R4	S	S1	Weight (kg)
05	100H7	100H7	210	615	165	240	97.5	460	230	40	180	100	455	175	90	405	19	24H9	337
06	110H7	110H7	210	650	165	240	97.5	490	230	10	180	145	490	220	90	440	19	24H9	416
07	120H7	120H7	210	725	195	280	114	560	280	0	215	130	560	215	110	495	24	28H9	573
08	130H7	130H7	250	770	195	285	114	580	280	0	215	190	605	275	110	540	24	28H9	677
09	140H7	140H7	250	840	235	330	140	640	320	15	245	155	660	260	130	580	28	36H9	925
10	150H7	150H7	300	890	235	350	140	670	320	0	245	205	710	310	130	630	28	36H9	1139
11	165H7	165H7	300	1010	270	400	161	760	380	30	300	180	805	295	160	705	35	40H9	1514
12	180H7	180H7	300	1080	270	405	161	783	380	5	300	265	875	380	160	775	35	40H9	1775

B413H-B418H

B4

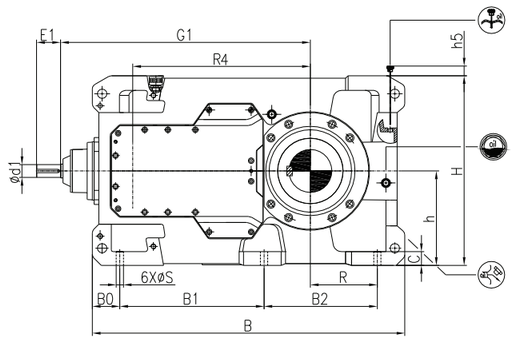

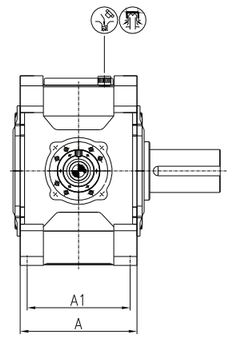

B4..HS
Parallel key solid shaft

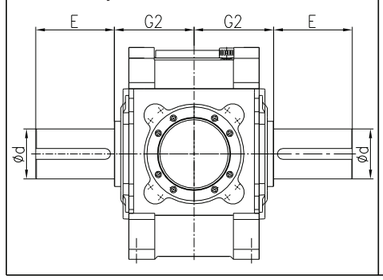

B4..HH
Parallel key hollow shaft

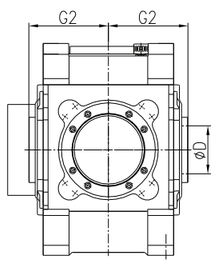

B4..HD
Hollow shaft with shrink disc

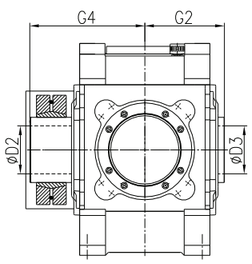

B4..HK
Hollow shaft with involute spline

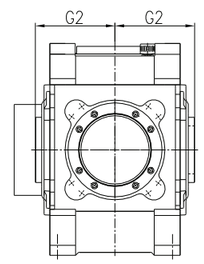

Size	iN=90-250		iN=100-280		iN=280-355		iN=315-400		A	A1	B	B0	B1	B2	C
	d1	E1	d1	E1	d1	E1	d1	E1							
13			60m6	140			50k6	110	545	475	1470	137	667.5	527.5	60
14			60m6	140			50k6	110	545	475	1610	137	667.5	667.5	60
15			75m6	140			60m6	140	620	535	1760	161	840	600	70
16			75m6	140			60m6	140	620	535	1850	160	840	690	70
17	75m6	140			60m6	140			680	600	1820	160	840	660	80
18			75m6	140			60m6	140	680	600	1940	160	840	780	80

Size	d	D	D2	D3	E	G1	G2	G4	H	h	h5	R	R4	S	Weight(kg)
13	200m6	190H7	190H7	190H7	350	1170	335	480	875	440	0	305	820	35	2510
14	220m6	210H7	210H7	210H7	350	1240	335	480	940	440	40	375	890	35	3000
15	240m6	230H7	230H7	230H7	410	1407	380	550	1000	500	60	365	987	42	3805
16	250m6	240H7	240H7	240H7	410	1453	380	550	1035	500	20	410	1033	42	4315
17	260n6	250H7	250H7	250H7	410	1455	415	600	1105	550	60	390	1035	42	4810
18	280n6	275H7	280H7	280H7	470	1515	415	600	1110	550	70	450	1095	42	5340

B419H~B426H

B4

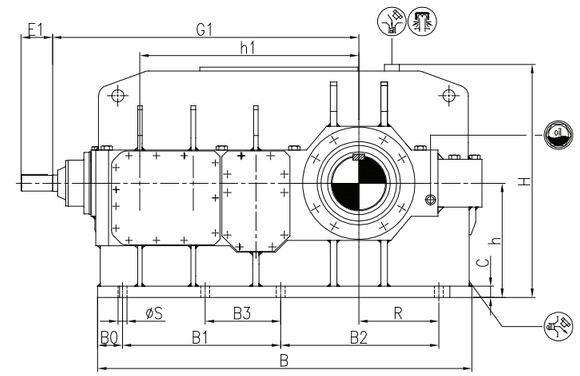

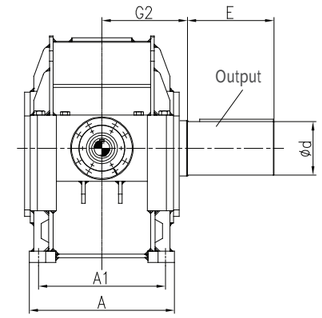

Size	iN=90～250		iN=100～250		iN=100～280		iN=280～355		iN=280～400		iN=315～400		A	A1	B
	d1	E1	d1	E1	d1	E1	d1	E1	d1	E1	d1	E1			
19			85m6	170			70m6	140					790	690	2035
20					85m6	170					70m6	140	790	690	2165
21			95m6	170					75m6	140			830	720	2375
22					95m6	170					75m6	140	830	720	2465
23	95m6	170					75m6	140					930	810	2560
24					95m6	170					75m6	140	930	810	2715
25	115m6	210					90m6	170					1050	910	2890
26	115m6	210					90m6	170					1050	910	3050

Size	B0	B1	B2	B3	C	d	E	G1	G2	H	h	h1	R	S	Weight (kg)
19	135	860	860	/	60	290n6	470	1665	465	1270	620	1190	435	48	6800
20	135	860	980	/	60	310n6	470	1725	465	1270	620	1250	495	48	8300
21	155	1000	1000	/	70	330n6	550	1992	490	1425	700	1387	485	56	9800
22	155	1000	1110	/	70	350n6	550	2047	490	1425	700	1442	540	56	10600
23	180	1185	985	545	80	370n6	550	2110	540	1565	780	1505	550	56	12600
24	180	1185	1115	545	80	390n6	650	2175	540	1565	780	1570	615	56	14600
25	175	1350	1080	640	90	410n6	650	2395	605	1785	860	1695	590	66	17400
26	175	1350	1260	565	90	430n6	650	2485	605	1785	860	1785	680	66	19000

H204V-H212V

H2 (Dip-in lubrication)

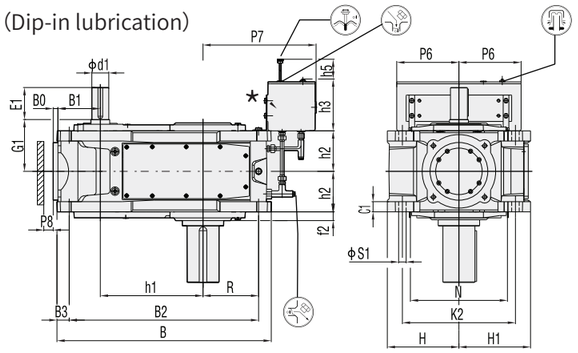

H204V-H212V

H2 (Forced lubrication)

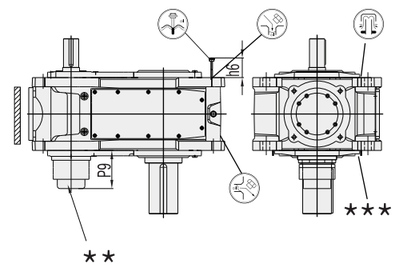

H2..VS
Parallel key solid shaft

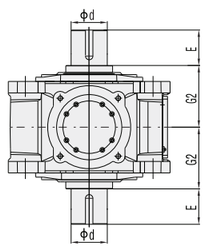

H2..VH
Parallel key hollow shaft

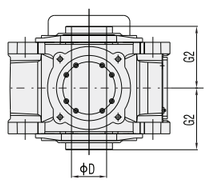

H2..VD
Hollow shaft with shrink disc

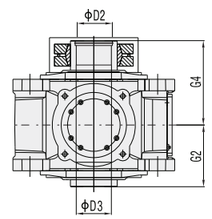

H2..VK
Hollow shaft with involute spline

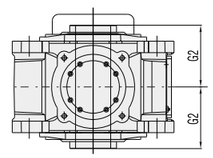

★ 补偿油箱(附件代号:US33)
★★ 油泵(附件代号US31)
★★★ 安装面

★ Compensation oil tank (Accessory code:US33)
★★ Oil Pump(Accessory code:US31)
★★★ Mounting position

Size	iN≤3.15(Size:04) iN≤3.55(Size:06) iN≤4(Size:08、09、11) iN≤5.6(Size:12)		3.55≤iN≤5.6(Size:04) 4≤iN≤5.6(Size:06) 4.5≤iN≤5.6(Size:08、09、11)		6.3≤iN≤11.2		12.5≤iN≤22.4		B	B0	B1	B2	B3	C1	d	D	D2	D3	E	f2
	d1	E1	d1	E1	d1	E1	d1	E1												
04	45k6	110	32k6	80	45k6	110	32k6	80	586	16	110	505	37	30±1	80m6	80H7	85H7	85H7	170	35
05	/	/	/	/	50k6	110	38k6	80	667	16	130	580	38	30±1	100m6	95H7	100H7	100H7	210	30
06	50k6	110	38k6	80	50k6	110	38k6	80	743	16	130	660	38	30±1	110m6	105H7	110H7	110H7	210	30
07	/	/	/	/	60m6	140	50k6	110	816	20	160	715	46	36±1	120m6	115H7	120H7	120H7	210	35
08	60m6	140	50k6	110	60m6	140	50k6	110	920	20	160	820	46	36±1	130m6	125H7	130H7	130H7	250	35
09	75m6	140	60m6	140	75m6	140	60m6	140	957	20	185	845	51	45±1.5	140m6	135H7	140H7	140H7	250	35
10	/	/	/	/	75m6	140	60m6	140	1062	20	185	945	51	45±1.5	160m6	150H7	150H7	150H7	300	35
11	90m6	170	70m6	140	90m6	170	70m6	140	1132	25	225	1005	63	54±1.5	170m6	165H7	165H7	165H7	300	42
12	90m6	170	/	/	90m6	170	70m6	140	1292	25	225	1160	63	54±1.5	180m6	180H7	180H7	180H7	300	42

Size	G1	G2	G4	H	H1	h1	h2	h3	h5	h6	K2	N	P6	P7	P8	P9	R	S1	Weight (kg)
04	170	140	205	200	200	270	107.5	175	140	85	300	250	150	340	35	132	160	24H9	195
05	195	165	240	230	230	315	127.5	210	160	105	360	310	240	405	35	145	175	24H9	310
06	195	165	240	230	260	350	127.5	210	160	105	360	310	240	450	35	145	220	24H9	385
07	210	195	280	280	280	385	150	210	160	120	430	360	240	445	35	143	215	28H9	519
08	210	195	285	280	300	430	150	210	160	120	430	360	240	505	35	143	275	28H9	624
09	240	235	330	320	320	450	185	285	200	155	490	410	330	585	40	135	260	36H9	828
10	240	235	350	320	350	500	185	285	200	155	490	430	330	635	40	135	310	36H9	1044
11	275	270	400	380	380	545	215	285	200	150	600	500	330	620	50	142	295	40H9	1371
12	275	270	405	380	410	615	215	285	200	150	600	500	330	705	50	142	380	40H9	1644

*默认安装面为下表面，以上表面为安装面请在订货时注明。

*The general mounting is up position,if down mounting position, please mention in the order.

H213V-H218V

H2 (With forced lubrication)

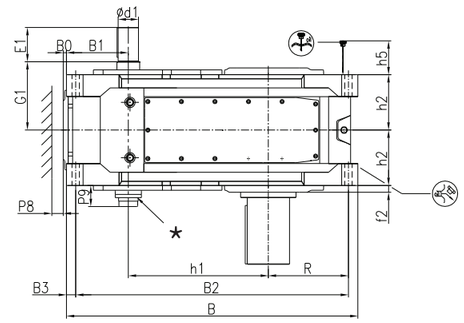

H213V-H218V

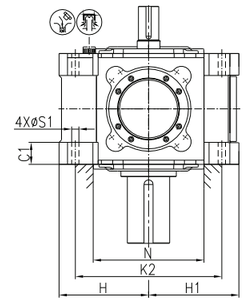

H2..VS
Parallel key solid shaft

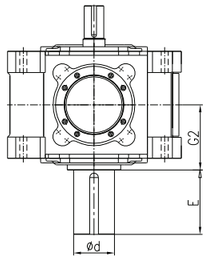

H2..VH
Parallel key hollow shaft

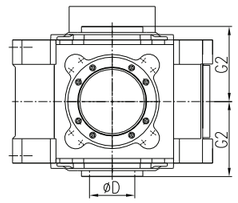

H2..VD
Hollow shaft with shrink disc

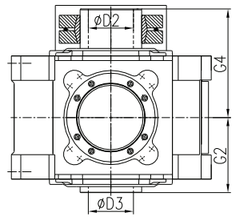

H2..VK
Hollow shaft with involute spline

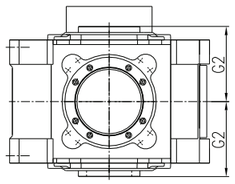

★ 油泵(附件代号US31)

★ Oil Pump(Accessory code:US31)

Size	iN=3.15-11.2		iN=3.15-12.5		iN=12.5-20		iN=14-20		B	B0	B1	B2	B3	C1	d	D
	d1	E1	d1	E1	d1	E1	d1	E1								
13	100m6	210			85m6	170			1375	0	292	1270	52	105±2	200m6	190H7
14	100m6	210			85m6	170			1505	2	287	1410	47	105±2	220m6	210H7
15	120m6	210			100m6	210			1630	7	343	1515	57	125±2	240m6	230H7
16	120m6	210			100m6	210			1720	8	342	1605	57	125±2	250m6	240H7
17	125m6	210			100m6	210			1790	20	380	1675	57	135±2	260n6	250H7
18			125m6	210			110m6	210	1910	20	380	1795	57	135±2	280n6	275H7

Size	D2	D3	E	f2	G1	G2	G4	H	H1	h1	h2	h5	K2	N	P8	P9	R	S1	Weight (kg)
13	190H7	190H7	350	35	330	335	480	440	435	635	272.5	210	720	550	50	130	395	48	2075
14	210H7	210H7	350	35	330	335	480	440	500	705	272.5	210	740	570	50	130	465	48	2825
15	230H7	230H7	410	32	365	380	550	500	500	762	310	230	820	640	50	130	467	55	3610
16	240H7	240H7	410	32	365	380	550	500	535	808	310	230	860	650	50	130	512	55	3970
17	250H7	250H7	410	42	420	415	600	550	555	860	340	250	900	690	70	170	492	55	4765
18	280H7	280H7	470	42	420	415	600	550	560	920	340	250	900	710	70	170	552	55	5265

*默认安装面为下表面，以上表面为安装面请在订货时注明。

*The general mounting is up position,if down mounting position, please mention in the order.

H305V-H312V

H3 (Dip-in lubrication)

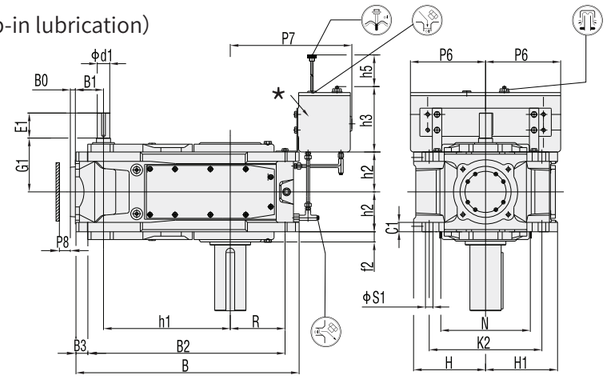

H305V-H312V

H3 (Forced lubrication)

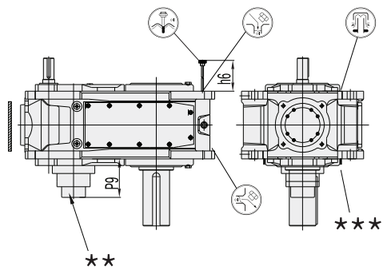

H3..VS
Parallel key solid shaft

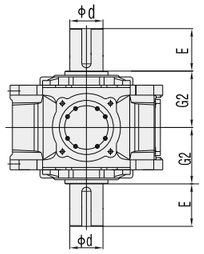

H3..VH
Parallel key hollow shaft

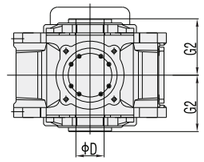

H3..VD
Hollow shaft with shrink disc

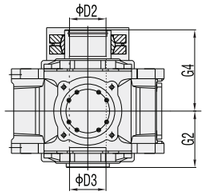

H3..VK
Hollow shaft with involute spline

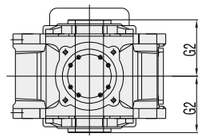

★ 补偿油箱(附件代号:US33)
★★ 油泵(附件代号US31)
★★★ 安装面

★ Compensation oil tank (Accessory code:US33)
★★ Oil Pump(Accessory code:US31)
★★★ Mounting position

Size	iN ≤ 45		iN ≤ 50		iN ≥ 50		iN ≥ 56		B	B0	B1	B2	B3	C1	d	D	D2	D3
	d1	E1	d1	E1	d1	E1	d1	E1										
05	40k6	80			30k6	60			713	16	90	630	38	30 ± 1	100m6	95H7	100H7	100H7
06	40k6	80			30k6	60			793	16	90	710	38	30 ± 1	110m6	105H7	110H7	110H7
07			45k6	110			35k6	80	876	16	110	775	46	36 ± 1	120m6	115H7	120H7	120H7
08			45k6	110			35k6	80	981	16	110	880	46	36 ± 1	130m6	125H7	130H7	130H7
09			60m6	140			45k6	110	1033	20	130	920	51	45±1.5	140m6	135H7	140H7	140H7
10			60m6	140			45k6	110	1131	20	130	1020	51	45±1.5	160m6	150H7	150H7	150H7
11			70m6	140			50k6	110	1227	20	160	1100	63	54±1.5	170m6	165H7	165H7	165H7
12			70m6	140			50k6	110	1382	20	160	1255	63	54±1.5	180m6	180H7	180H7	180H7

Size	E	f2	G1	G2	G4	H	H1	h1	h2	h3	h5	h6	K2	N	P6	P7	P8	P9	R	S1	Weight (kg)
05	210	30	170	165	240	230	230	405	127.5	210	160	105	360	310	240	405	35	145	175	24H9	324
06	210	30	170	165	240	230	260	440	127.5	210	160	105	360	310	240	450	35	145	220	24H9	403
07	210	35	210	195	280	280	280	495	150	210	160	120	430	360	240	445	35	143	215	28H9	558
08	250	35	210	195	285	280	300	540	150	210	160	120	430	360	240	505	35	143	275	28H9	663
09	250	35	240	235	330	320	320	580	185	285	200	155	490	420	330	585	40	155	260	36H9	899
10	300	35	240	235	350	320	350	630	185	285	200	155	490	430	330	635	40	155	310	36H9	1113
11	300	42	275	270	400	380	380	705	215	285	200	150	600	510	330	620	50	162	295	40H9	1481
12	300	42	275	270	405	380	410	775	215	285	200	150	600	510	330	705	50	162	380	40H9	1742

*默认安装面为下表面，以上表面为安装面请在订货时注明。

*The general mounting is up position,if down mounting position, please mention in the order.

H313V-H318V

H3 (With forced lubrication)

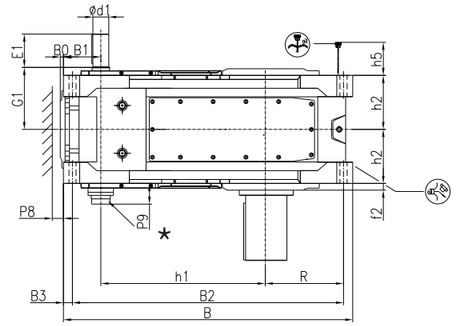

H313V-H318V

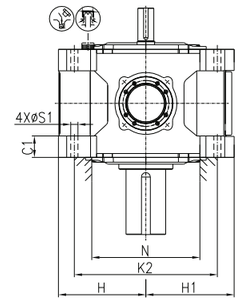

H3..VS
Parallel key solid shaft

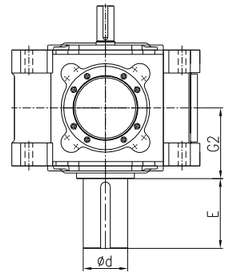

H3..VH
Parallel key hollow shaft

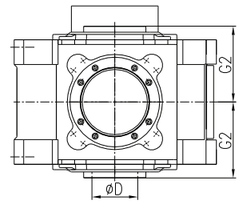

H3..VD
Hollow shaft with shrink disc

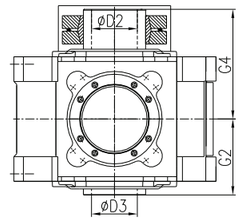

H3..VK
Hollow shaft with involute spline

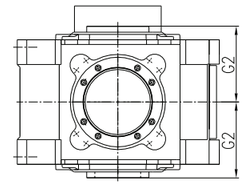

★ 油泵(附件代号US31)

★ Oil Pump(Accessory code:US31)

Size	iN=14-45		iN=16-50		iN=50-100		iN=56-100		iN=56-112		B	B0	B1	B2	B3	C1	d	D
	d1	E1	d1	E1	d1	E1	d1	E1	d1	E1								
13			85m6	170			60m6	140			1470	0	207	1375	47	105±2	200m6	190H7
14			85m6	170			60m6	140			1610	0	207	1515	48	105±2	220m6	210H7
15			100m6	210					75m6	140	1760	0	249	1655	51	125±2	240m6	230H7
16			100m6	210					75m6	140	1850	2	247	1735	57	125±2	250m6	240H7
17	100m6	210			75m6	140					1820	14	235	1705	57	135±2	260n6	250H7
18			100m6	210					75m6	140	1940	14	235	1825	57	135±2	280n6	275H7

Size	D2	D3	E	f2	G1	G2	G4	H	H1	h1	h2	h5	K2	N	P8	P9	R	S1	Weight (kg)
13	190H7	190H7	350	35	325	335	480	440	435	820	272.5	210	720	570	50	170	395	48	2450
14	210H7	210H7	350	35	325	335	480	440	500	890	272.5	210	740	570	50	170	465	48	2880
15	230H7	230H7	410	32	365	380	550	500	500	987	310	230	820	710	50	170	470	55	3640
16	240H7	240H7	410	32	365	380	550	500	535	1033	310	230	860	710	50	170	512	55	4195
17	250H7	250H7	410	42	400	415	600	550	555	1035	340	250	900	790	70	210	492	55	4670
18	280H7	280H7	470	42	400	415	600	550	560	1095	340	250	900	790	70	210	552	55	5165

*默认安装面为下表面，以上表面为安装面请在订货时注明。

*The general mounting is up position,if down mounting position, please mention in the order.

H407V-H412V

H4 (Dip-in lubrication)

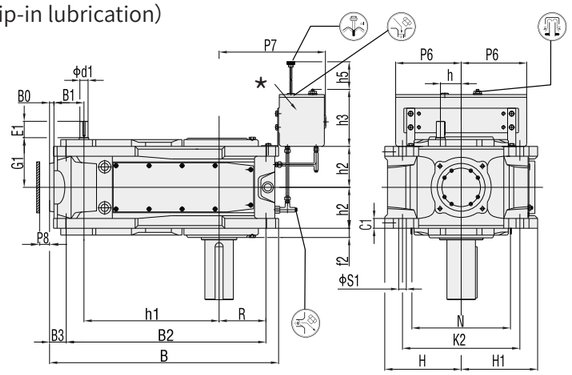

H407V-H412V

H4 (Forced lubrication)

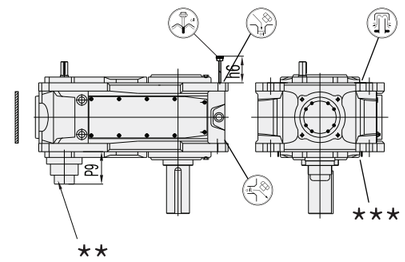

H4..VS
Parallel key solid shaft

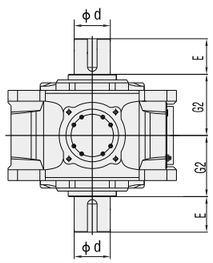

H4..VH
Parallel key hollow shaft

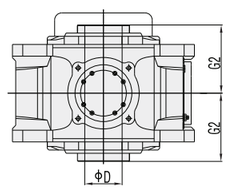

H4..VD
Hollow shaft with shrink disc

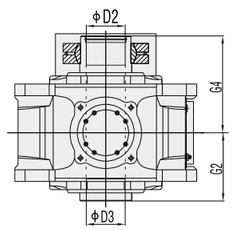

H4..VK
Hollow shaft with involute spline

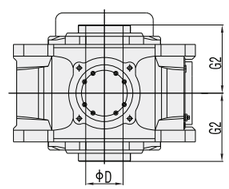

★ 补偿油箱(附件代号:US33)
★★ 油泵(附件代号US31)
★★★ 安装面

★ Compensation oil tank (Accessory code:US33)
★★ Oil Pump(Accessory code:US31)
★★★ Mounting position

Size	iN ≤ 200		iN ≤ 224		iN ≥ 224		iN ≥ 250		B	B0	B1	B2	B3	C1	d	D	D2	D3	E
	d1	E1	d1	E1	d1	E1	d1	E1											
07	30k6	60			24k6	50			876	16	110	775	46	36 ± 1	120m6	115H7	120H7	120H7	210
08	30k6	60			24k6	50			981	16	110	880	46	36 ± 1	130m6	125H7	130H7	130H7	250
09	35k6	80			28k6	60			1033	20	130	920	51	45 ± 1.5	140m6	135H7	140H7	140H7	250
10	35k6	80			28k6	60			1131	20	130	1020	51	45 ± 1.5	160m6	150H7	150H7	150H7	300
11			45k6	110			32k6	80	1227	20	160	1100	63	54 ± 1.5	170m6	165H7	165H7	165H7	300
12			45k6	110			32k6	80	1382	20	160	1255	63	54 ± 1.5	180m6	180H7	180H7	180H7	300

Size	f2	G1	G2	G4	H	H1	h	h1	h2	h3	h5	h6	K2	N	P6	P7	P8	P9	R	S1	Weight (kg)
07	35	180	195	280	280	280	76	495	150	210	160	120	430	360	240	445	35	102	215	28H9	559
08	35	180	195	285	280	300	76	540	150	210	160	120	430	360	240	505	35	102	275	28H9	664
09	35	215	235	330	320	320	93.5	580	185	285	200	155	490	420	330	585	40	125	260	36H9	901
10	35	215	235	350	320	350	93.5	630	185	285	200	155	490	430	330	635	40	125	310	36H9	1115
11	42	250	270	400	380	380	120	705	215	285	200	150	600	510	330	620	50	140	295	40H9	1487
12	42	250	270	405	380	410	120	775	215	285	200	150	600	510	330	705	50	140	380	40H9	1747

*默认安装面为下表面，以上表面为安装面请在订货时注明。

*The general mounting is up position,if down mounting position, please mention in the order.

H413V-H418V

H4 (With forced lubrication)

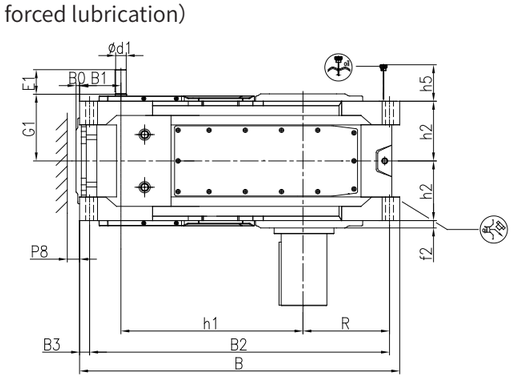

H413V-H418V

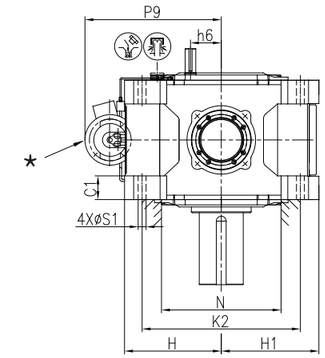

H4..VS
Parallel key solid shaft

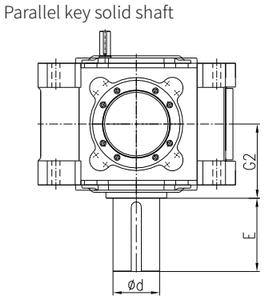

H4..VH
Parallel key hollow shaft

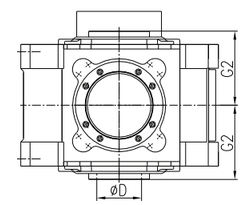

H4..VD
Hollow shaft with shrink disc

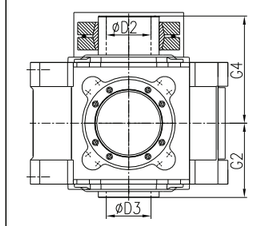

H4..VK
Hollow shaft with involute spline

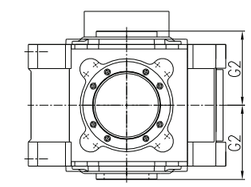

★ 电机油泵 (附件代号US32)

★ Motor Pump(Accessory code:US32)

Size	iN=63-200		iN=71-224		iN=224-400		iN=250-450		B	B0	B1	B2	B3	C1	d	D	D2	D3
	d1	E1	d1	E1	d1	E1	d1	E1										
13			50k6	110			38k6	80	1470	0	207	1375	47	105±2	200m6	190H7	190H7	190H7
14			50k6	110			38k6	80	1610	0	207	1515	48	105±2	220m6	210H7	210H7	210H7
15			60m6	140			50k6	110	1760	0	249	1655	51	125±2	240m6	230H7	230H7	230H7
16			60m6	140			50k6	110	1850	2	247	1735	57	125±2	250m6	240H7	240H7	240H7
17	60m6	140			50k6	110			1820	14	235	1705	57	135±2	260n6	250H7	250H7	250H7
18			60m6	140			50k6	110	1940	14	235	1825	57	135±2	280n6	275H7	280H7	280H7

Size	E	f2	G1	G2	G4	H	H1	h1	h2	h5	h6	K2	N	P8	P9	R	S1	Weight (kg)
13	350	35	305	335	480	440	435	820	272.5	210	140	720	570	50	670	395	48	2450
14	350	35	305	335	480	440	500	890	272.5	210	140	740	570	50	670	465	48	2995
15	410	32	345	380	550	500	500	987	310	230	175	820	710	50	710	470	55	3810
16	410	32	345	380	550	500	535	1033	310	230	175	860	710	50	710	512	55	4290
17	410	42	380	415	600	550	555	1035	340	250	175	900	790	70	775	492	55	4795
18	470	42	380	415	600	550	560	1095	340	250	175	900	790	70	775	552	55	5325

*默认安装面为下表面，以上表面为安装面请在订货时注明。

*The general mounting is up position,if down mounting position, please mention in the order.

B204V-B212V

B2 (Dip-in lubrication)

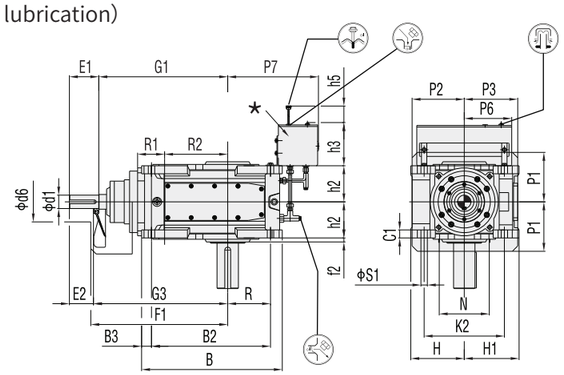

B204V-B212V

B2 (Forced lubrication)

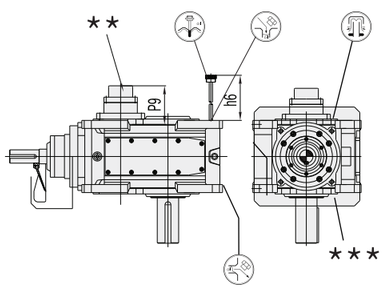

B2..VS
Parallel key solid shaft

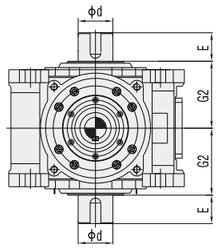

B2..VH
Parallel key hollow shaft

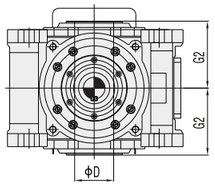

B2..VD
Hollow shaft with shrink disc

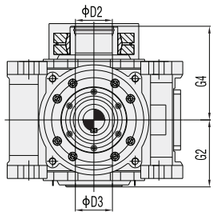

B2..VK
Hollow shaft with involute spline

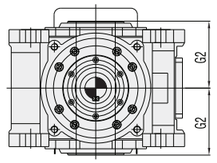

★ 补偿油箱(附件代号:US33)
★★ 油泵(附件代号US31)
★★★ 安装面

★ Compensation oil tank (Accessory code:US33)
★★ Oil Pump(Accessory code:US31)
★★★ Mounting position

Size	iN ≤ 14			B	B2	B3	C1	d	d6	D	D2	D3	E	F1	f2	G1	G2
	d1	E1	E2														
04	50k6	110	90	530	445	50	30 ± 1	80m6	150	80H7	85H7	85H7	170	517	20	482	140
05	60m6	140	110	595	505	55	30 ± 1	100m6	160	95H7	100H7	100H7	210	596	10	551	165
06	60m6	140	110	680	585	60	30 ± 1	110m6	160	105H7	110H7	110H7	210	635	10	590	165
07	75m6	140	110	725	620	60	36 ± 1	120m6	210	115H7	120H7	120H7	210	705	15	660	195
08	75m6	140	110	825	725	55	36 ± 1	130m6	210	125H7	130H7	130H7	250	745	15	700	195
09	85m6	170	135	860	740	70	48±1.5	140m6	220	135H7	140H7	140H7	250	805	20	755	235
10	85m6	170	135	970	840	80	48±1.5	160m6	220	150H7	150H7	150H7	300	865	20	815	235
11	95m6	170	135	1030	875	90	54±1.5	170m6	250	165H7	165H7	165H7	300	1005	15	945	270
12	95m6	170	135	1165	1030	70	54±1.5	180m6	250	180H7	180H7	180H7	300	1055	15	995	270

Size	G3	G4	H	H1	h2	h3	h5	h6	K2	N	P1	P2	P3	P6	P7	P9	R	R1	R2	S1	Weight (kg)
04	502	205	200	200	135	175	140	130	300	250	185	195	200	150	340	140	160	160	177	24H9	217
05	581	240	230	230	160	210	160	145	360	310	215	220	235	240	405	132	175	185	201	24H9	349
06	620	240	230	260	160	210	160	145	360	310	215	220	235	240	450	132	220	185	240	24H9	437
07	690	280	280	280	190	210	160	180	430	360	250	270	285	240	445	150	215	225	240	28H9	599
08	730	285	280	300	190	210	160	180	430	360	250	270	285	240	505	150	275	225	280	28H9	723
09	790	330	320	320	220	285	200	165	490	390	250	310	325	330	585	160	260	265	280	36H9	921
10	850	350	320	350	220	285	200	165	490	430	250	310	325	330	635	160	310	265	340	36H9	1158
11	980	400	380	380	265	285	200	140	600	450	330	370	385	330	620	161	295	320	340	40H9	1516
12	1030	405	380	410	265	285	200	140	600	490	330	370	385	330	705	161	380	320	390	40H9	1833

*默认安装面为下表面，以上表面为安装面请在订货时注明。

*The general mounting is up position,if down mounting position, please mention in the order.

B213V-B218V

B2 (With forced lubrication)

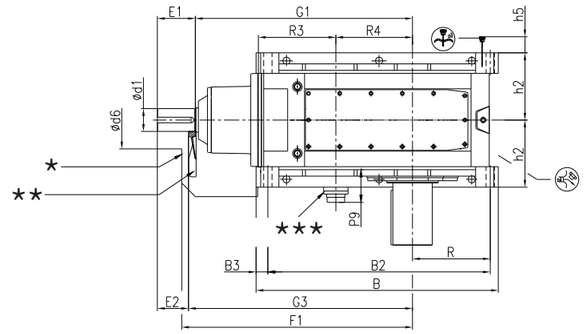

B213V-B218V

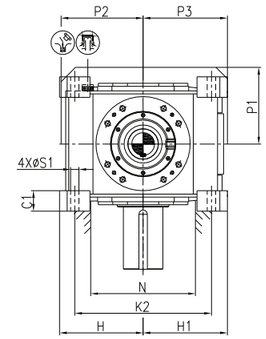

B2..VS
Parallel key solid shaft

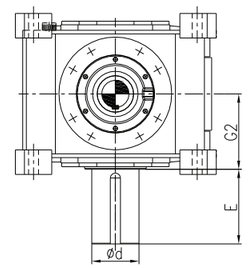

B2..VH
Parallel key hollow shaft

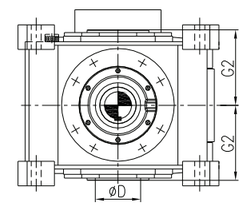

B2..VD
Hollow shaft with shrink disc

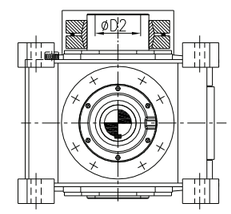

B2..VK
Hollow shaft with involute spline

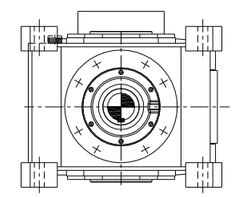

★ 风扇罩
★★ 冷却风扇 (附件代号UF21)
★★★ 轴端油泵 (附件代号US31)

★ Fan guard
★★ Cooling fan (Accessory code:UF21)
★★★ Pump(Accessory code:US31)

Size	iN=6.3-14			iN=7.1-14			B	B2	B3	C1	d	d6	D	D2	D3	E	F1	f2	G1
	d1	E1	E2	d1	E1	E2													
13	115m6	210	175				1205	1110	47	105±2	200m6	245	190H7	190H7	190H7	350	1175	35	1092
14	115m6	210	175				1345	1250	47	105±2	220m6	245	210H7	210H7	210H7	350	1245	35	1170
15	140m6	250	200				1430	1315	57	125±2	240m6	280	230H7	230H7	230H7	410	1385	32	1305
16	140m6	250	200				1520	1405	57	125±2	250m6	280	240H7	240H7	240H7	410	1430	32	1330
17	150m6	250	200				1595	1465	65	135±2	260n6	380	250H7	250H7	250H7	410	1520	42	1450
18				150m6	250	200	1715	1585	65	135±2	280n6	380	275H7	280H7	280H7	470	1580	42	1515

Size	G2	G3	G4	H	H1	h2	h5	K2	N	P1	P2	P3	P9	R	R3	R4	S1	Weight (kg)
13	335	1127	480	440	430	325	210	720	550	375	430	450	200	395	370	392	48	2530
14	335	1205	480	440	445	325	210	740	570	375	430	450	200	465	370	470	48	2945
15	380	1355	550	500	500	380	230	820	590	435	490	495	200	467	442	470	55	4230
16	380	1380	550	500	535	380	230	860	650	435	490	495	200	512	442	495	55	4750
17	415	1500	600	550	555	437.5	250	900	690	505	540	555	200	512	490	505	55	5990
18	415	1565	600	550	560	437.5	250	900	710	505	540	555	200	572	490	570	55	6555

*默认安装面为下表面，以上表面为安装面请在订货时注明。

*The general mounting is up position,if down mounting position, please mention in the order.

B304V-B312V

B3 (Dip-in lubrication)

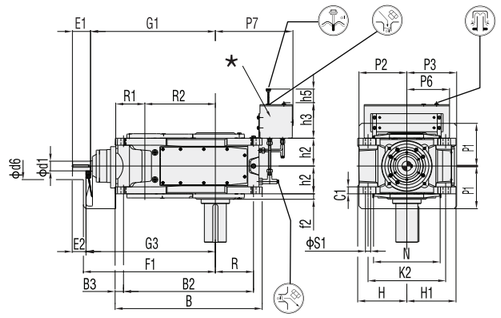

B304V-B312V

B3 (Forced lubrication)

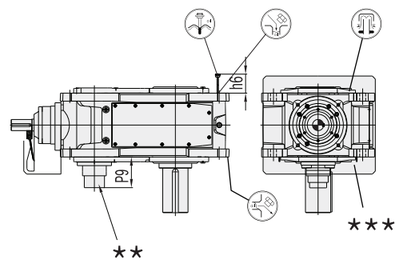

B3..VS
Parallel key solid shaft

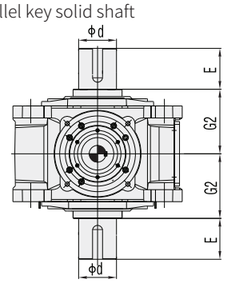

B3..VH
Parallel key hollow shaft

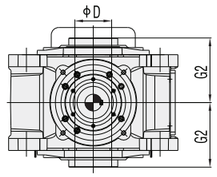

B3..VD
Hollow shaft with shrink disc

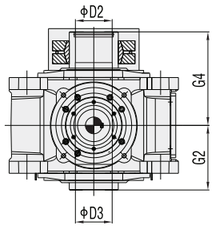

B3..VK
Hollow shaft with involute spline

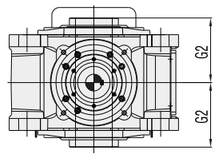

★ 补偿油箱(附件代号:US33)
★★ 油泵(附件代号US31)
★★★ 安装面

★ Compensation oil tank (Accessory code:US33)
★★ Oil Pump(Accessory code:US31)
★★★ Mounting position

Size	iN ≤ 63			iN ≥ 71			B	B2	B3	C1	d	d6	E	F1	f2	D	D2	D3	G1
	d1	E1	E2	d1	E1	E2													
04	35k6	80	60	30k6	60	40	586	505	37	30 ± 1	80m6	150	170	530	30	80H7	85H7	85H7	500
05	45k6	110	80	35k6	80	50	667	580	38	30 ± 1	100m6	160	210	620	30	95H7	100H7	100H7	575
06	45k6	110	80	35k6	80	50	743	660	38	30 ± 1	110m6	160	210	655	35	105H7	110H7	110H7	610
07	50k6	110	90	40k6	80	60	816	715	46	36 ± 1	120m6	210	210	720	36	115H7	120H7	120H7	690
08	50k6	110	90	40k6	80	60	920	820	46	36 ± 1	130m6	210	250	765	35	125H7	130H7	130H7	735
09	60m6	140	110	50k6	110	80	957	845	51	45±1.5	140m6	220	250	845	35	135H7	140H7	140H7	800
10	60m6	140	110	50k6	110	80	1062	945	51	45±1.5	160m6	220	300	895	35	150H7	150H7	150H7	850
11	75m6	140	115	60m6	140	115	1132	1005	63	54±1.5	170m6	210	300	1010	42	165H7	165H7	165H7	965
12	75m6	140	115	60m6	140	115	1292	1160	63	54±1.5	180m6	210	300	1080	42	180H7	180H7	180H7	1035

Size	G2	G3	G4	H	H1	h2	h3	h5	h6	K2	N	P1	P2	P3	P6	P7	P9	R	R1	R2	S1	Weight (kg)
04	140	520	205	200	200	107.5	175	140	85	300	250	185	195	200	150	340	142	160	110	270	24H9	210
05	165	605	240	230	230	127.5	210	160	105	360	310	215	220	235	240	405	145	175	130	315	24H9	337
06	165	640	240	230	260	127.5	210	160	105	360	310	215	220	235	240	450	145	220	130	350	24H9	412
07	195	710	280	280	280	150	210	160	120	430	360	250	270	285	240	445	143	215	160	385	28H9	555
08	195	755	285	280	300	150	210	160	120	430	360	250	270	285	240	505	143	275	160	430	28H9	660
09	235	830	330	320	320	185	285	200	155	490	410	250	310	325	330	585	155	260	185	450	36H9	891
10	235	880	350	320	350	185	285	200	155	490	430	250	310	325	330	635	155	310	185	500	36H9	1106
11	270	990	400	380	380	215	285	200	150	600	500	330	370	385	330	620	162	295	225	545	40H9	1484
12	270	1060	405	380	410	215	285	200	150	600	500	330	370	385	330	705	162	380	225	615	40H9	1757

*默认安装面为下表面，以上表面为安装面请在订货时注明。

*The general mounting is up position,if down mounting position, please mention in the order.

B313V-B318V

B3 (With forced lubrication)

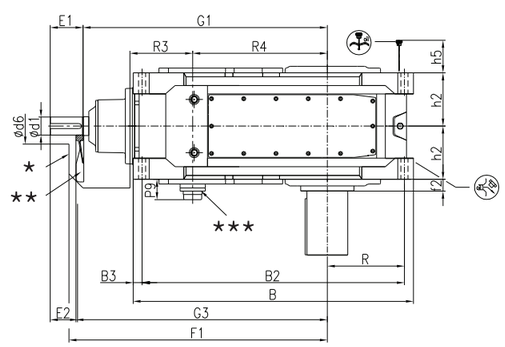

B313V-B318V

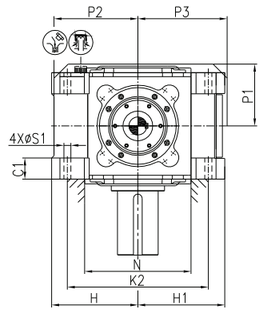

B3..VS
Parallel key solid shaft

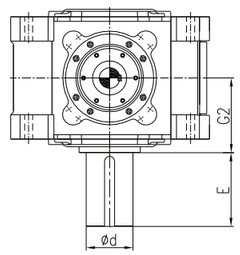

B3..VH
Parallel key hollow shaft

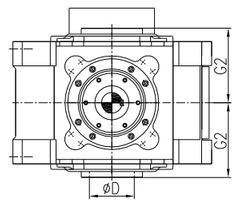

B3..VD
Hollow shaft with shrink disc

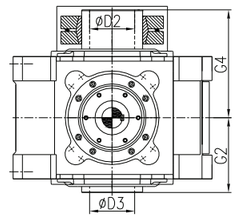

B3..VK
Hollow shaft with involute spline

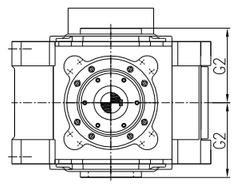

★ 风扇罩
★★ 冷却风扇 (附件代号UF21)
★★★ 轴端油泵 (附件代号US31)

★ Fan guard
★★ Cooling fan (Accessory code:UF21)
★★★ Pump(Accessory code:US31)

Size	iN=16-56			iN=16-63			iN=63-80			iN=71-90			B	B2	B3	C1	d	d6	D	D2	D3
	d1	E1	E2	d1	E1	E2	d1	E1	E2	d1	E1	E2									
13				85m6	170	135				70m6	140	105	1365	1270	52	105±2	200m6	210	190H7	190H7	190H7
14				85m6	170	135				70m6	140	105	1505	1410	47	105±2	220m6	210	210H7	210H7	210H7
15				95m6	170	135				75m6	140	105	1630	1515	57	125±2	240m6	210	230H7	230H7	230H7
16				95m6	170	135				75m6	140	105	1720	1605	57	125±2	250m6	210	240H7	240H7	240H7
17	115m6	210	175				90m6	170	135				1790	1675	57	135±2	260n6	230	250H7	250H7	250H7
18				115m6	210	175				90m6	170	135	1910	1795	57	135±2	280n6	230	275H7	280H7	280H7

Size	E	F1	f2	G1	G2	G3	G4	H	H1	h2	h5	K2	N	P1	P2	P3	P9	R	R3	R4	S1	Weight (kg)
13	350	1165	35	1110	335	1145	480	440	435	272.5	210	720	550	325	425	435	170	395	265	635	48	2470
14	350	1235	35	1180	335	1215	480	440	500	272.5	210	740	570	325	425	435	170	465	265	705	48	3025
15	410	1420	32	1367	380	1402	550	500	500	310	230	820	640	365	485	520	170	467	320	762	55	3925
16	410	1470	32	1413	380	1448	550	500	535	310	230	860	650	365	485	520	170	512	320	808	55	4295
17	410	1620	42	1560	415	1595	600	550	555	340	250	900	690	395	535	570	170	492	370	860	55	5110
18	470	1680	42	1620	415	1655	600	550	560	340	250	900	710	395	535	570	170	552	370	920	55	5645

*默认安装面为下表面，以上表面为安装面请在订货时注明。

*The general mounting is up position,if down mounting position, please mention in the order.

B405V-B412V

B4 (Dip-in lubrication)

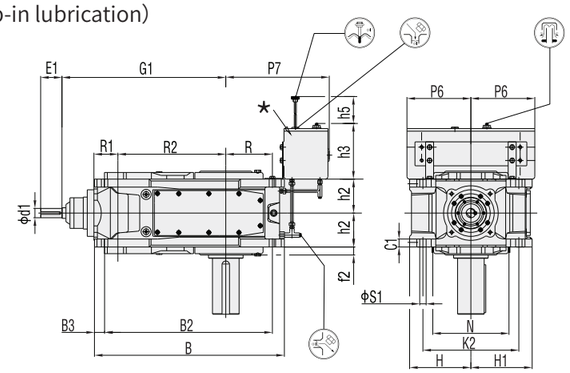

B405V-B412V

B4 (Forced lubrication)

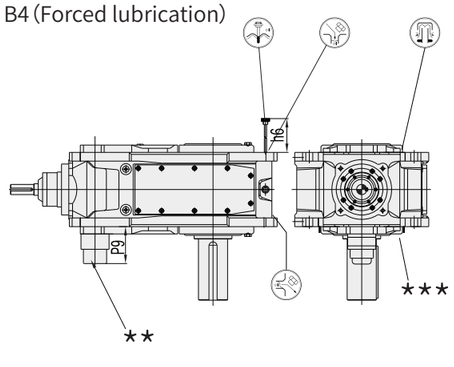

B4..VS
Parallel key solid shaft

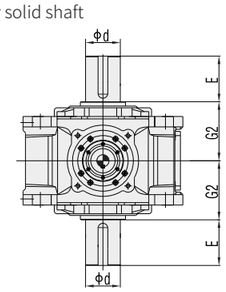

B4..VH
Parallel key hollow shaft

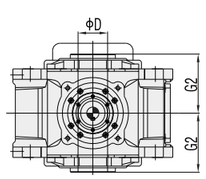

B4..VD
Hollow shaft with shrink disc

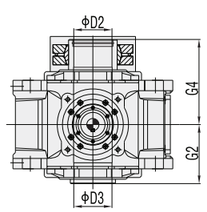

B4..VK
Hollow shaft with involute spline

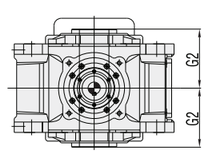

★ 补偿油箱(附件代号:US33)
★★ 油泵(附件代号US31)
★★★ 安装面

★ Compensation oil tank (Accessory code:US33)
★★ Oil Pump(Accessory code:US31)
★★★ Mounting position

Size	iN ≤ 250		iN ≤ 280		iN ≥ 280		iN ≥ 315		B	B2	B3	C1	d	D	D2	D3	E	f2
	d1	E1	d1	E1	d1	E1	d1	E1										
05			35k6	80			25k6	50	713	630	38	30 ± 1	100m6	95H7	100H7	100H7	210	30
06			35k6	80			25k6	50	793	710	38	30 ± 1	110m6	105H7	110H7	110H7	210	30
07			35k6	80			30k6	60	876	775	46	36 ± 1	120m6	115H7	120H7	120H7	210	35
08			35k6	80			30k6	60	981	880	46	36 ± 1	130m6	125H7	130H7	130H7	250	35
09	45k6	110			35k6	80			1033	920	51	45 ± 1.5	140m6	135H7	140H7	140H7	250	35
10	45k6	110			35k6	80			1131	1020	51	45 ± 1.5	160m6	150H7	150H7	150H7	300	35
11			50k6	110			40k6	80	1227	1100	63	54 ± 1.5	170m6	165H7	165H7	165H7	300	42
12			50k6	110			40k6	80	1382	1255	63	54 ± 1.5	180m6	180H7	180H7	180H7	300	42

Size	G1	G2	G4	H	H1	h2	h3	h5	h6	K2	N	P6	P7	P9	R	R1	R2	S1	Weight (kg)
05	615	165	240	230	230	127.5	210	160	105	360	310	240	405	120	175	90	405	24H9	337
06	650	165	240	230	260	127.5	210	160	105	360	310	240	450	120	220	90	440	24H9	416
07	725	195	280	280	280	150	210	160	120	430	360	240	445	102	215	110	495	28H9	573
08	770	195	285	280	300	150	210	160	120	430	360	240	505	102	275	110	540	28H9	677
09	840	235	330	320	320	185	285	200	155	490	420	330	585	125	260	130	580	36H9	925
10	890	235	350	320	350	185	285	200	155	490	430	330	635	125	310	130	630	36H9	1139
11	1010	270	400	380	380	215	285	200	150	600	510	330	620	140	295	160	705	40H9	1514
12	1080	270	405	380	410	215	285	200	150	600	510	330	705	140	380	160	775	40H9	1775

*默认安装面为下表面，以上表面为安装面请在订货时注明。

*The general mounting is up position,if down mounting position, please mention in the order.

B413V-B418V

B4 (Forced lubrication)

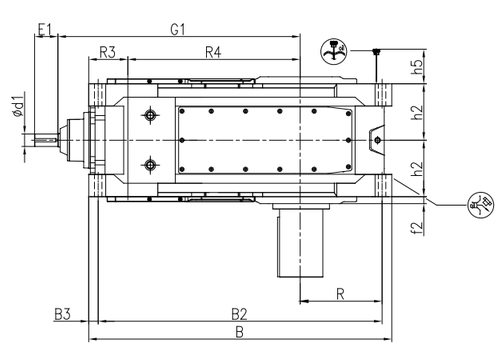

B413V-B418V

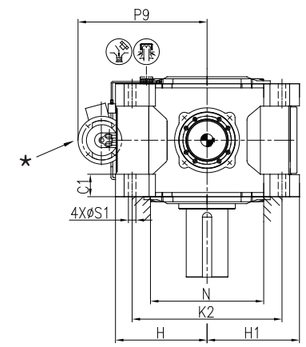

B4..VS
Parallel key solid shaft

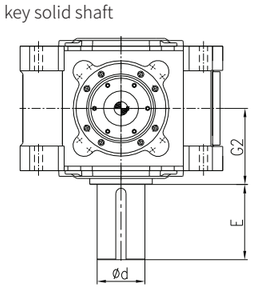

B4..VH
Parallel key hollow shaft

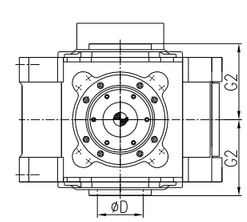

B4..VD
Hollow shaft with shrink disc

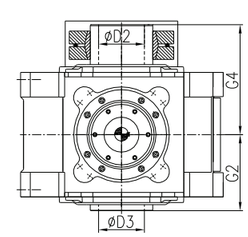

B4..VK
Hollow shaft with involute spline

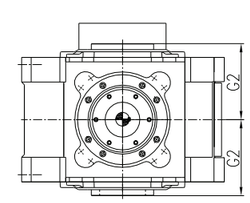

★ 电机油泵 (附件代号US32)

★ Motor Pump(Accessory code:US32)

Size	iN=90-250		iN=100-280		iN=280-355		iN=315-400		B	B2	B3	C1	d	D	D2	D3
	d1	E1	d1	E1	d1	E1	d1	E1								
13			60m6	140			50k6	110	1470	1375	47	105±2	200m6	190H7	190H7	190H7
14			60m6	140			50k6	110	1610	1515	48	105±2	220m6	210H7	210H7	210H7
15			75m6	140			60m6	140	1760	1655	51	125±2	240m6	230H7	230H7	230H7
16			75m6	140			60m6	140	1850	1735	57	125±2	250m6	240H7	240H7	240H7
17	75m6	140			60m6	140			1820	1705	57	135±2	260n6	250H7	250H7	250H7
18			75m6	140			60m6	140	1940	1825	57	135±2	280n6	275H7	280H7	280H7

Size	E	f2	G1	G2	G4	H	H1	h2	h5	K2	N	P9	R	R4	S1	Weight (kg)
13	350	35	1170	335	480	440	435	272.5	210	720	570	670	395	820	48	2510
14	350	35	1240	335	480	440	500	272.5	210	740	570	670	465	890	48	3000
15	410	32	1407	380	550	500	500	310	230	820	710	710	470	987	55	3805
16	410	32	1453	380	550	500	535	310	230	860	710	710	512	1033	55	4315
17	410	42	1455	415	600	550	555	340	250	900	790	775	492	1035	55	4810
18	470	42	1515	415	600	550	560	340	250	900	790	775	552	1095	55	5340

*默认安装面为下表面，以上表面为安装面请在订货时注明。

*The general mounting is up position,if down mounting position, please mention in the order.

12 轴端中心孔　12 Shaft end central hole

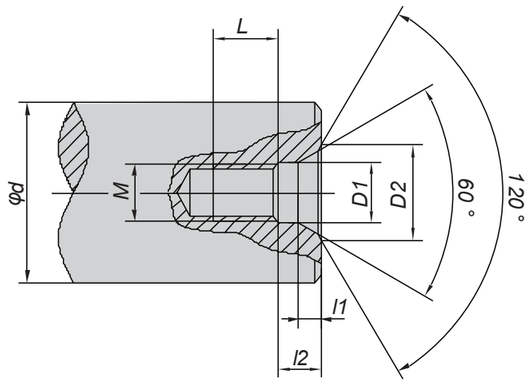

d	M	L	12	11	D1	D2
7＜d0≤10	M3	10	2.6	1.8	3.2	5.8
10＜d0≤13	M4	10	3.2	2.1	4.3	7.4
13＜d0≤16	M5	10	4	2.4	5.3	8.8
16＜d0≤21	M6	12	5	2.8	6.4	10.5
21＜d0≤24	M8	12	6	3.3	8.4	13.2
24＜d0≤30	M10	15	7.5	3.8	10.5	16.3
30＜d0≤38	M12	20	9.5	4.4	13	19.8
38＜d0≤50	M16	25	12	5.2	17	25.3
50＜d0≤85	M20	30	15	6.4	21	31.3
85＜d0≤130	M24	35	18	8	26	38
130＜d0≤225	M30	45	18	11	31	48
225＜d0≤320	M36	55	22	15	37	60
320＜d0≤500	M42	60	26	19	43	71
500＜d0≤710	M48	65	30	23	49	83

13 平键与键槽的尺寸　13 Dimension of parallel key and keyway

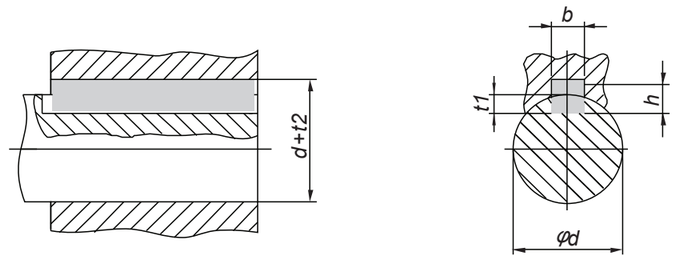

d	b	h	t_1	$d + t_2$
8 ＜ d ≤ 10	3	3	1.8	d + 1.4
10 ＜ d ≤ 12	4	4	2.5	d + 1.8
12 ＜ d ≤ 17	5	5	3	d + 2.3
17 ＜ d ≤ 22	6	6	3.5	d + 2.8
22 ＜ d ≤ 30	8	7	4	d + 3.3
30 ＜ d ≤ 38	10	8	5	d + 3.3
38 ＜ d ≤ 44	12	8	5	d + 3.3
44 ＜ d ≤ 50	14	9	5.5	d + 3.8
50 ＜ d ≤ 58	16	10	6	d + 4.3
58 ＜ d ≤ 65	18	11	7	d + 4.4
65 ＜ d ≤ 75	20	12	7.5	d + 4.9
75 ＜ d ≤ 85	22	14	9	d + 5.4
85 ＜ d ≤ 95	25	14	9	d + 5.4
95 ＜ d ≤ 110	28	16	10	d + 6.4
110 ＜ d ≤ 130	32	18	11	d + 7.4
130 ＜ d ≤ 150	36	20	12	d + 8.4
150 ＜ d ≤ 170	40	22	13	d + 9.4
170 ＜ d ≤ 200	45	25	15	d + 10.4
200 ＜ d ≤ 230	50	28	17	d + 11.4
230 ＜ d ≤ 260	56	32	20	d + 12.4
260 ＜ d ≤ 290	63	32	20	d + 12.4
290 ＜ d ≤ 330	70	36	22	d + 14.4
330 ＜ d ≤ 380	80	40	25	d + 15.4
380 ＜ d ≤ 440	90	45	28	d + 17.4
440 ＜ d ≤ 500	100	50	31	d + 19.5
500 ＜ d ≤ 560	110	56	34.3	d + 22.2
560 ＜ d ≤ 640	120	63	39	d + 24.5

14建议输出联结尺寸图表

14.1 带平键联接的空心轴尺寸图表

14Suggested output connection dimensions

14.1 Hollow shaft with parallel key connection

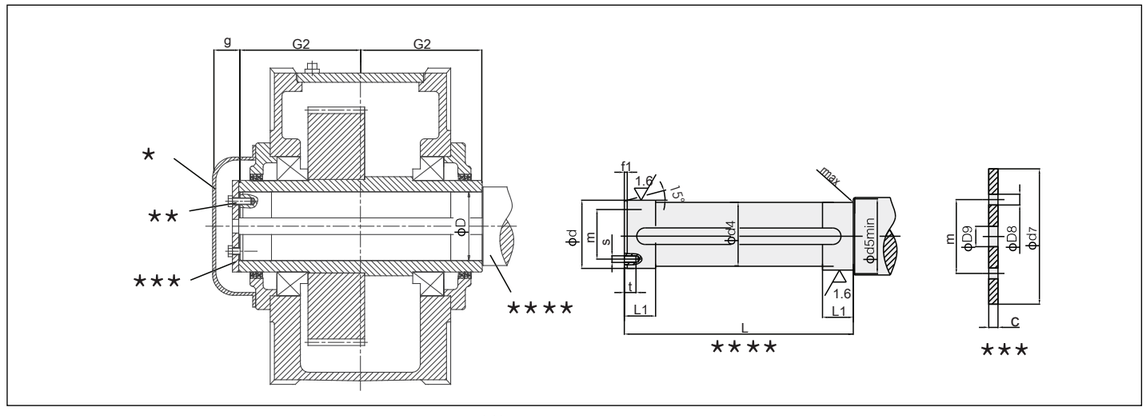

★ 防护罩
★★ 螺栓
★★★ 端板
★★★★ 输出轴

★ Protection cover
★★ Bolts
★★★ End plate
★★★★ Output shaft

Type H2...H,H3...H,H4...H,B3...H,B4...H(Size 04-18)

机座号 Size	被驱动设备的驱动轴 Driven equipment shaft									端板 End plate					螺栓 Bolt		空心轴 Hollow shaft		
	d	d4	d5	f1	L	L1	r	s	t	c	D8	D9	d7	m	Size	Qty.	D	G2	g
04	80h6	79.5	88	4	278	35	1.2	M10	18	10	11	22	100	60	M10 × 25	2	80H7	140	30.5
05	95h6	94.5	105	5	328	40	1.6	M10	18	10	11	26	120	70	M10 × 25	2	95H7	165	30.5
06	105h6	104.5	116	5	328	45	1.6	M10	18	10	11	26	120	70	M10 × 25	2	105H7	165	30.5
07	115h6	114.5	126	5	388	50	1.6	M12	20	12	13.5	26	140	80	M12 × 30	2	115H7	195	37
08	125h6	124.5	136	6	388	55	2.5	M12	20	12	13.5	26	150	85	M12 × 30	2	125H7	195	37
09	135h6	134.5	147	6	467	60	2.5	M12	20	12	13.5	33	160	90	M12 × 30	2	135H7	235	32
10	150h6	149.5	162	6	467	65	2.5	M12	20	12	13.5	33	185	110	M12 × 30	2	150H7	235	37
11	165h6	164.5	177	7	537	70	2.5	M16	28	15	17.5	33	195	120	M16 × 40	2	165H7	270	40
12	180h6	179.5	192	7	537	75	2.5	M16	28	15	17.5	33	220	130	M16 × 40	2	180H7	270	50
13	190h6	189.5	206	7	667	80	3	M16	28	18	17.5	33	230	140	M16 × 40	2	190H7	335	42.5
14	210h6	209.5	226	8	667	85	3	M16	28	18	17.5	33	250	160	M16 × 40	2	210H7	335	42.5
15	230h6	229.5	248	8	756	100	3	M20	38	25	22	39	270	180	M20 × 55	4	230H7	380	57
16	240h6	239.5	258	8	756	100	3	M20	38	25	22	39	280	180	M20 × 55	4	240H7	380	57
17	250h6	249.5	270	8	826	110	4	M20	38	25	22	39	300	190	M20 × 55	4	250H7	415	57
18	275h6	274.5	295	9	826	120	4	M20	38	25	22	39	330	210	M20 × 55	4	275H7	415	57

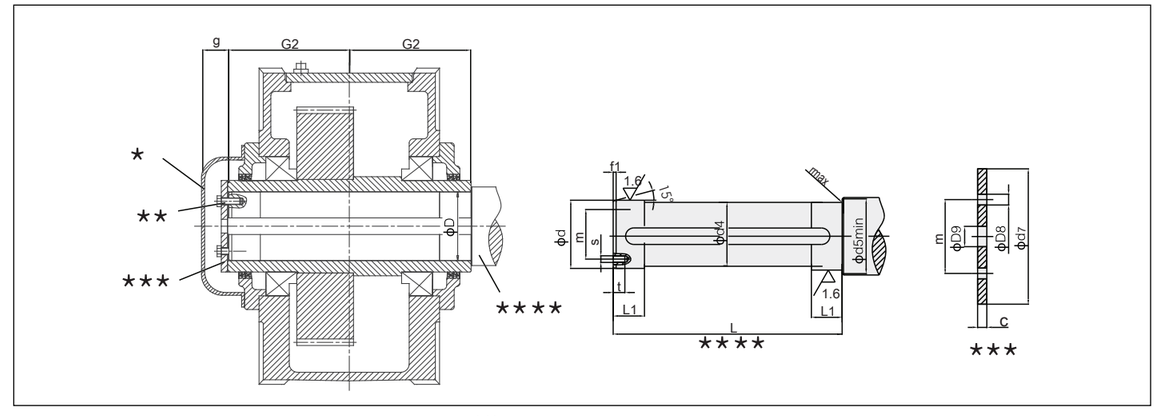

★ 防护罩
★★ 螺栓
★★★ 端板
★★★★ 输出轴

★ Protection cover
★★ Bolts
★★★ End plate
★★★★ Output shaft

Type B2...H(Size 04-18)

机座号 Size	被驱动设备的驱动轴 Driven equipment shaft									端板 End plate					螺栓 Bolt		空心轴 Hollow shaft		
	d	d4	d5	f1	L	L1	r	s	t	c	D8	D9	d7	m	Size	Qty.	D	G2	g
04	80h6	79.5	88	4	278	35	1.2	M10	18	10	11	22	100	60	M10 × 25	2	80H7	140	38
05	95h6	94.5	105	5	328	40	1.6	M10	18	10	11	26	120	70	M10 × 25	2	95H7	165	43
06	105h6	104.5	116	5	328	45	1.6	M10	18	10	11	26	120	70	M10 × 25	2	105H7	165	43
07	115h6	114.5	126	5	388	50	1.6	M12	20	12	13.5	26	140	80	M12 × 30	2	115H7	195	52
08	125h6	124.5	136	6	388	55	2.5	M12	20	12	13.5	26	150	85	M12 × 30	2	125H7	195	52
09	135h6	134.5	147	6	467	60	2.5	M12	20	12	13.5	33	160	90	M12 × 30	2	135H7	235	52
10	150h6	149.5	162	6	467	65	2.5	M12	20	12	13.5	33	185	110	M12 × 30	2	150H7	235	57
11	165h6	164.5	177	7	537	70	2.5	M16	28	15	17.5	33	195	120	M16 × 40	2	165H7	270	55
12	180h6	179.5	192	7	537	75	2.5	M16	28	15	17.5	33	220	130	M16 × 40	2	180H7	270	65
13	190h6	189.5	206	7	667	80	3	M16	28	18	17.5	33	230	140	M16 × 40	2	190H7	335	65
14	210h6	209.5	226	8	667	85	3	M16	28	18	17.5	33	250	160	M16 × 40	2	210H7	335	65
15	230h6	229.5	248	8	756	100	3	M20	38	25	22	39	270	180	M20 × 55	4	230H7	380	92
16	240h6	239.5	258	8	756	100	3	M20	38	25	22	39	280	180	M20 × 55	4	240H7	380	92
17	250h6	249.5	270	8	826	110	4	M20	38	25	22	39	300	190	M20 × 55	4	250H7	415	97
18	275h6	274.5	295	9	826	120	4	M20	38	25	22	39	330	210	M20 × 55	4	275H7	415	97

注：1.被驱动设备的驱动轴材质: 40Cr或强度更高的钢。
2.被驱动设备的驱动轴不在我们的供货范围之内。如果需要的话,请另订货。
3.锁紧盘、防护罩、端板及弹性挡圈均为带锁紧盘联接空心轴的标准配制。

Note：1.Material of driven equipment shaft: 40cr or steel with higher strength.
2.Driven equipment shaft is not in scope of supply, please order if required.
3.Shrink disc, protection cover, end plate and circlip are supplied with gearbox as standard.

14.2 带锁紧盘联接的空心轴尺寸图表

14.2 Hollow shaft for shrink Disks

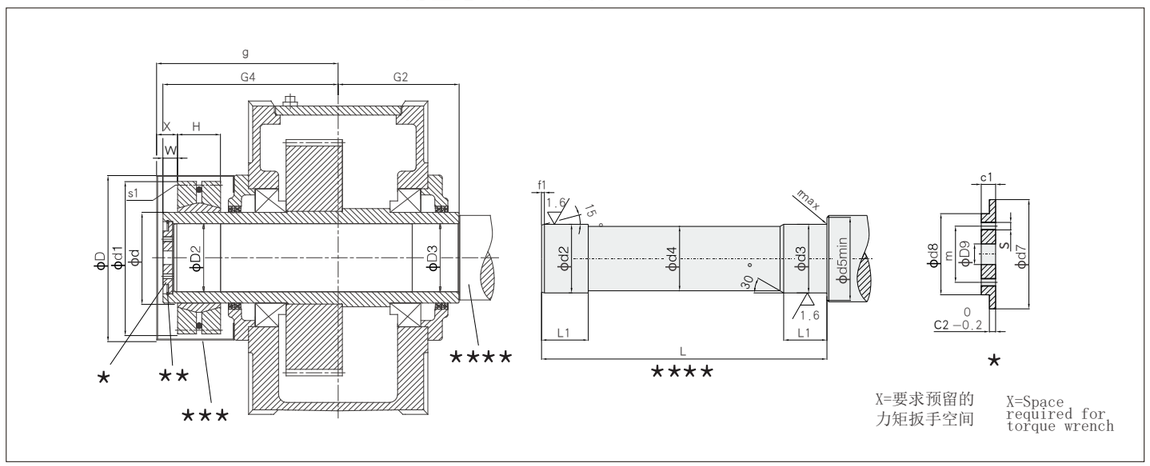

★ 端板
★★ 弹性挡圈
★★★ 防护罩
★★★★ 输出轴

★ End plate
★★ Circlip
★★★ Protection cover
★★★★ Output shaft

Type H2...D,H3...D,H4..D,B3...D,B4...D(Size 04-18)

机座号 Size	被驱动设备的驱动轴 Driven equipment shaft								端板 End plate								弹性挡圈 Circlip	空心轴 Hollow shaft				锁紧盘 Shrink disc					Bolt	Protection cover	
	d2	d3	d4	d5	f1	L	L1	r	c1	c2	d7	d8	d9	m	s	Number		D2	D3	G2	G4	Type	d	d1	H	W	s1	D	g
04	85g6	85h6	84.5	95	4	326	48	2	17	7	90	70	22	50	M8	2	90	85H7	85H7	140	205	SP2-110	110	185	49	15	M12	212	226
05	100g6	100h6	99.5	114	5	383	53	2	20	8	105	80	26	55	M10	2	105	100H7	100H7	165	240	SP2-125	125	215	53	17	M12	252	266
06	110g6	110h6	109.5	124	5	383	58	3	20	8	115	85	26	60	M10	2	115	110H7	110H7	165	240	SP2-140	140	230	58	17	M12	252	266
07	120g6	120h6	119.5	134	5	453	68	3	20	8	125	90	26	65	M12	2	125	120H7	120H7	195	280	SP2-155	155	263	62	23	M12	322	322
08	130g6	130h6	129.5	145	6	458	73	3	20	8	135	100	26	70	M12	2	135	130H7	130H7	195	285	SP2-165	165	290	68	23	M16	322	322
09	140g6	140h6	139.5	160	6	539	82	4	23	10	150	110	33	80	M12	2	150	140H7	140H7	235	330	SP2-175	175	300	68	28	M16	322	357
10	150g6	150h6	149.5	170	6	559	92	4	23	10	160	120	33	90	M12	2	160	150H7	150H7	235	350	SP2-185	185	330	85	28	M16	392	392
11	165f6	165g6	164.5	185	7	644	112	4	23	10	175	130	33	90	M12	2	175	165H7	165H7	270	400	SP2-220	220	370	103	30	M16	392	430
12	180f6	180g6	179.5	200	7	649	122	4	23	10	190	140	33	100	M16	2	190	180H7	180H7	270	405	SP2-240	240	405	107	30	M20	483	450
13	190f6	190g6	189.5	213	7	789	137	5	23	10	200	150	33	110	M16	2	200	190H7	190	335	480	SP2-260	260	430	119	30	M20	480	510.5
14	210f6	210g6	209.5	233	8	784	147	5	28	14	220	170	33	130	M16	2	220	210H7	210	335	480	SP2-280	280	460	132	30	M20	480	510.5
15	230f6	230g6	229.5	253	8	899	157	5	28	14	240	180	39	140	M16	2	240	230H7	230	380	550	SP2-300	300	485	140	35	M20	540	590
16	240f6	240g6	239.5	263	8	899	157	5	28	14	250	190	39	150	M20	2	250	240H7	240	380	550	SP2-320	320	520	140	35	M20	540	590
17	250f6	250g6	249.5	278	8	982	177	5	30	14	265	200	39	150	M20	2	265	250H7	250	415	600	SP2-340	340	570	155	35	M20	620	640
18	280f6	280g6	279.5	306	9	982	177	5	30	14	290	210	39	160	M20	2	290	280H7	280	415	600	SP2-360	360	590	162	35	M24	620	640

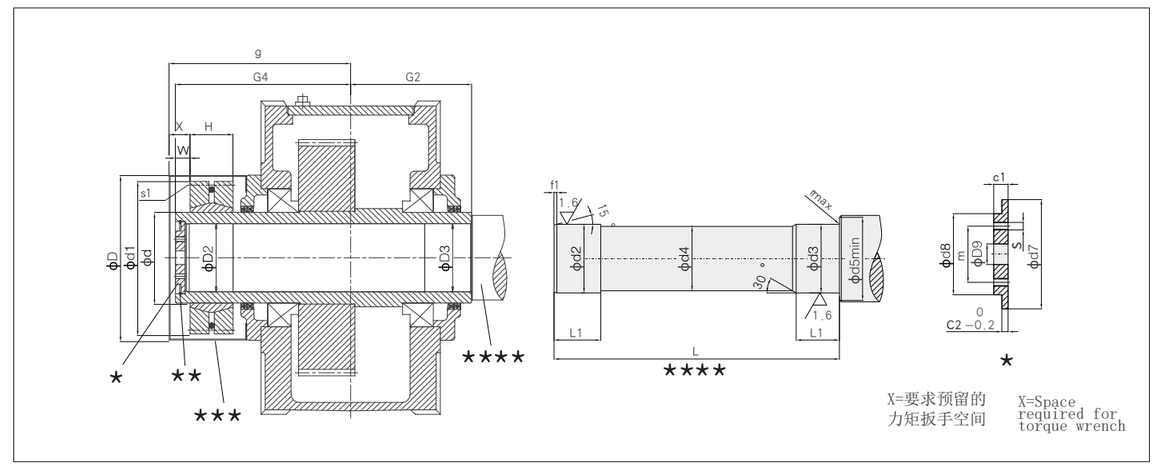

★ 端板
★★ 弹性挡圈
★★★ 防护罩
★★★★ 输出轴

★ End plate
★★ Circlip
★★★ Protection cover
★★★★ Output shaft

Type B2...D(Size 04-18)

机座号 Size	被驱动设备的驱动轴 Driven equipment shaft								端板 End plate								弹性挡圈 Circlip	空心轴 Hollow shaft				锁紧盘	锁紧盘		Shrink disc		Bolt	Protection cover	
	d2	d3	d4	d5	f1	L	L1	r	c1	c2	d7	d8	d9	m	s	Number		D2	D3	G2	G4	Type	d	d1	H	W	s1	D	g
04	85g6	85h6	84.5	95	4	326	48	2	17	7	90	70	22	50	M8	2	90	85H7	85H7	140	205	SP2-110	110	185	49	15	M12	212	233
05	100g6	100h6	99.5	114	5	383	53	2	20	8	105	80	26	55	M10	2	105	100H7	100H7	165	240	SP2-125	125	215	53	17	M12	252	278
06	110g6	110h6	109.5	124	5	383	58	3	20	8	115	85	26	60	M10	2	115	110H7	110H7	165	240	SP2-140	140	230	58	17	M12	252	278
07	120g6	120h6	119.5	134	5	453	68	3	20	8	125	90	26	65	M12	2	125	120H7	120H7	195	280	SP2-155	155	263	62	23	M12	322	337
08	130g6	130h6	129.5	145	6	458	73	3	20	8	135	100	26	70	M12	2	135	130H7	130H7	195	285	SP2-165	165	290	68	23	M16	322	337
09	140g6	140h6	139.5	160	6	539	82	4	23	10	150	110	33	80	M12	2	150	140H7	140H7	235	330	SP2-175	175	300	68	28	M16	322	377
10	150g6	150h6	149.5	170	6	559	92	4	23	10	160	120	33	90	M12	2	160	150H7	150H7	235	350	SP2-185	185	330	85	28	M16	392	412
11	165f6	165g6	164.5	185	7	644	112	4	23	10	175	130	33	90	M12	2	175	165H7	165H7	270	400	SP2-220	220	370	103	30	M16	392	445
12	180f6	180g6	179.5	200	7	649	122	4	23	10	190	140	33	100	M16	2	190	180H7	180H7	270	405	SP2-240	240	405	107	30	M20	483	465
13	190f6	190g6	189.5	213	7	789	137	5	23	10	200	150	33	110	M16	2	200	190H7	190	335	480	SP2-260	260	430	119	30	M20	480	533
14	210f6	210g6	209.5	233	8	784	147	5	28	14	220	170	33	130	M16	2	220	210H7	210	335	480	SP2-280	280	460	132	30	M20	480	533
15	230f6	230g6	229.5	253	8	899	157	5	28	14	240	180	39	140	M16	2	240	230H7	230	380	550	SP2-300	300	485	140	35	M20	540	625
16	240f6	240g6	239.5	263	8	899	157	5	28	14	250	190	39	150	M20	2	250	240H7	240	380	550	SP2-320	320	520	140	35	M20	540	625
17	250f6	250g6	249.5	278	8	982	177	5	30	14	265	200	39	150	M20	2	265	250H7	250	415	600	SP2-340	340	570	155	35	M20	620	670
18	280f6	280g6	279.5	306	9	982	177	5	30	14	290	210	39	160	M20	2	290	280H7	280	415	600	SP2-360	360	590	162	35	M24	620	670

注：1.被驱动设备的驱动轴材质：40Cr或强度更高的钢。
2.被驱动设备的驱动轴不在我们的供货范围之内。如果需要的话，请另订货
3.锁紧盘、防护罩、端板及弹性挡圈均为带锁紧盘联接空心轴的标准配制。
4.被驱动设备的驱动轴表面不得沾有机油或润滑脂。

Note：1.Material of driven equipment shaft: 40cr or steel with higher strength.
2.Driven equipment shaft is not in scope of supply, please order if required.
3.Shrink disc, protection cover, end plate and circlip are supplied with gearbox as standard.
4.Driven equipment shaft shrink disc for connection.Driven machine shaft must be free of oil or grease.

14.3 带花键空心轴尺寸图表

14.3 Hollow shaft with involute spline

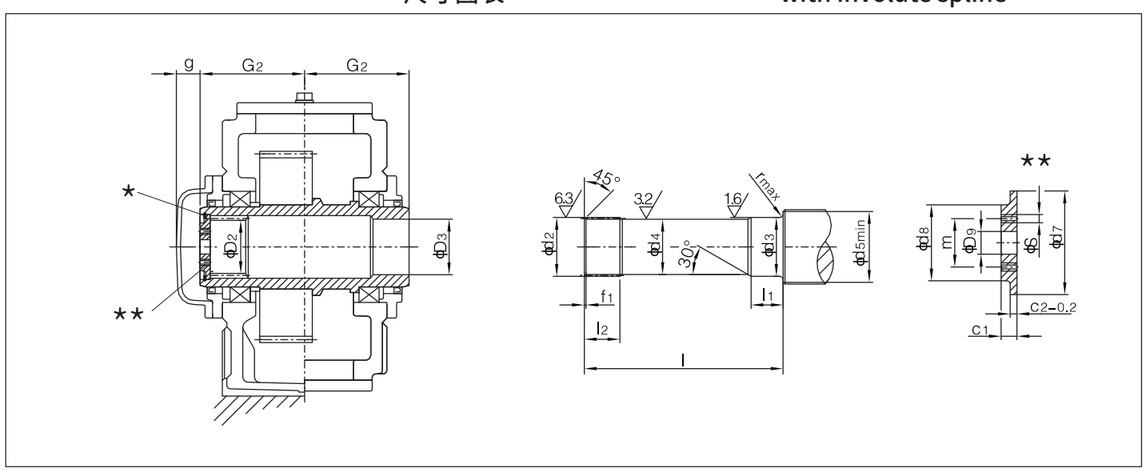

★ 弹性挡圈
★★ 端板

★ Commection flange
★★ Coupling

Type H2...K,H3...K,H4...K,B3...K,B4...K(Size 04-18)

机座号 Size	渐开线花键 Involute splines DIN5480	被驱动设备的驱动轴 Driven equipment shaft									端板 End plate								弹性挡圈 Circlip	空心轴 Hollow shaft				螺栓 Bolt
		d2	d3	d4	d5	f1	l	l1	l2	r	c1	c2	d7	d8	D9	m	s	Number		D2	D3	G2	g	
5	W95X3X30X30X8f	94.4h11	100h6	93	114	3	308	53	90	2	20	8	105d9	80	26	55	M10	2	105	89H11	100H7	165	30.5	M24
6	W95X3X30X30X8f	94.4h11	110h6	93	124	3	308	58	90	3	20	8	105d9	80	26	55	M10	2	105	89H11	110H7	165	30.5	M24
7	W120X3X30X38X8f	119.4h11	120h6	118	134	3	368	68	105	3	20	8	125d9	90	26	65	M12	2	125	114H11	120H7	195	37	M24
8	W120X3X30X38X8f	119.4h11	130h6	118	145	3	368	73	105	3	20	8	125d9	90	26	65	M12	2	125	114H11	130H7	195	37	M24
9	W140X3X30X45X8f	139.4h11	145h6	138	160	3	444	82	125	4	23	10	150d9	110	33	80	M12	2	150	134H11	145H7	235	32	M30
10	W140X3X30X45X8f	139.4h11	155h6	138	170	3	444	92	125	4	23	10	150d9	110	33	80	M12	2	150	134H11	155H7	235	37	M30
11	W170X5X30X32X8f	169h11	170g6	168	185	5	514	112	150	4	23	10	175d9	130	33	90	M12	2	175	160H11	170H7	270	40	M30
12	W170X5X30X32X8f	169h11	185g6	168	200	5	514	122	150	4	23	10	175d9	130	33	90	M12	2	175	160H11	185H7	270	50	M30
13	W190x5x30x36x8f	189h11	195g6	188	213	5	644	137	180	5	23	10	200d9	150	33	110	M16	2	200	180H11	195H7	335	42.5	M30
14	W190x5x30x36x8f	189h11	215g6	188	233	5	644	147	180	5	23	10	200d9	150	33	110	M16	2	200	180H11	215H7	335	42.5	M20
15	W220x5x30x42x8f	219h11	235g6	218	253	5	728	157	200	5	28	14	240d9	180	39	140	M16	2	240	210H11	235H7	380	57	M36
16	W220x5x30x42x8f	219h11	245g6	218	263	5	728	157	200	5	28	14	240d9	180	39	140	M16	2	240	210H11	245H7	380	57	M36
17	W250x5x30x48x8f	249h11	260g6	248	278	5	796	177	215	5	30	14	265d9	200	39	150	M20	2	265	240H11	260H7	415	57	M36
18	W250x5x30x48x8f	249h11	285g6	248	306	5	796	177	215	5	30	14	265d9	200	39	150	M20	2	265	240H11	285H7	415	57	M36

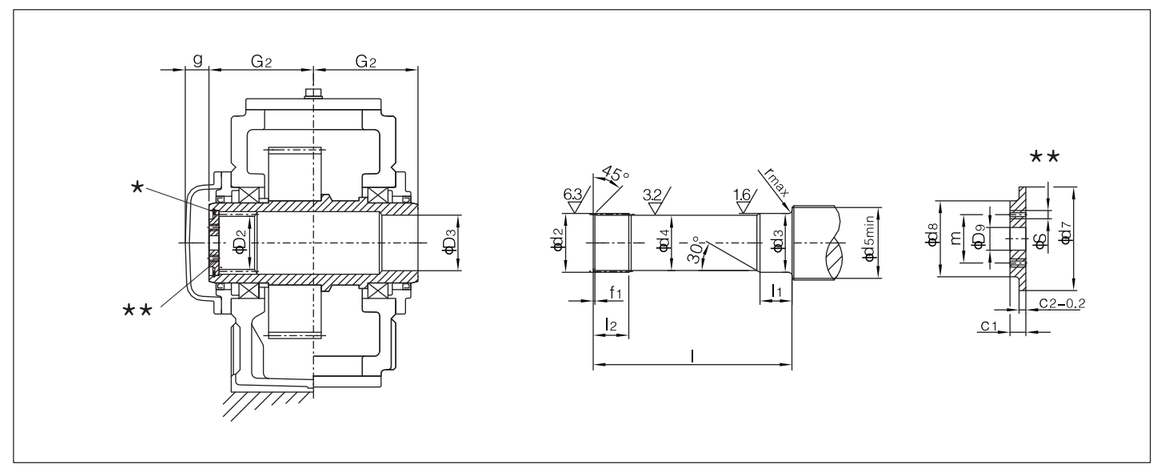

★ 弹性挡圈
★★ 端板

★ Commection flange
★★ Coupling

Type B2...K(Size 04-12)

机座号 Size	渐开线花键 Involute splines DIN5480	被驱动设备的驱动轴 Driven equipment shaft									端板 End plate								弹性挡圈 Circlip	空心轴 Hollow shaft				螺栓 Bolt
		d2	d3	d4	d5	f1	l	l1	l2	r	c1	c2	d7	d8	D9	m	s	Number		D2	D3	G2	g	s1
5	W95X3X30X30X8f	94.4h11	100h6	93	114	3	308	53	90	2	20	8	105d9	80	26	55	M10	2	105	89H11	100H7	165	43	M24
6	W95X3X30X30X8f	94.4h11	110h6	93	124	3	308	58	90	3	20	8	105d9	80	26	55	M10	2	105	89H11	110H7	165	43	M24
7	W120X3X30X38X8f	119.4h11	120h6	118	134	3	368	68	105	3	20	8	125d9	90	26	65	M12	2	125	114H11	120H7	195	52	M24
8	W120X3X30X38X8f	119.4h11	130h6	118	145	3	368	73	105	3	20	8	125d9	90	26	65	M12	2	125	114H11	130H7	195	52	M24
9	W140X3X30X45X8f	139.4h11	145h6	138	160	3	444	82	125	4	23	10	150d9	110	33	80	M12	2	150	134H11	145H7	235	52	M30
10	W140X3X30X45X8f	139.4h11	155h6	138	170	3	444	92	125	4	23	10	150d9	110	33	80	M12	2	150	134H11	155H7	235	57	M30
11	W170X5X30X32X8f	169h11	170g6	168	185	5	514	112	150	4	23	10	175d9	130	33	90	M12	2	175	160H11	170H7	270	55	M30
12	W170X5X30X32X8f	169h11	185g6	168	200	5	514	122	150	4	23	10	175d9	130	33	90	M12	2	175	160H11	185H7	270	65	M30
13	W190x5x30x36x8f	189h11	195g6	188	213	5	644	137	180	5	23	10	200d9	150	33	110	M16	2	200	180H11	195H7	335	65	M30
14	W190x5x30x36x8f	189h11	215g6	188	233	5	644	147	180	5	23	10	200d9	150	33	110	M16	2	200	180H11	215H7	335	65	M20
15	W220x5x30x42x8f	219h11	235g6	218	253	5	728	157	200	5	28	14	240d9	180	39	140	M16	2	240	210H11	235H7	380	92	M36
16	W220x5x30x42x8f	219h11	245g6	218	263	5	728	157	200	5	28	14	240d9	180	39	140	M16	2	240	210H11	245H7	380	92	M36
17	W250x5x30x48x8f	249h11	260g6	248	278	5	796	177	215	5	30	14	265d9	200	39	150	M20	2	265	240H11	260H7	415	97	M36
18	W250x5x30x48x8f	249h11	285g6	248	306	5	796	177	215	5	30	14	265d9	200	39	150	M20	2	265	240H11	285H7	415	97	M36

注：1.被驱动设备的驱动轴材质：40Cr或强度更高的钢。
2.被驱动设备的驱动轴不在我们的供货范围之内。如果需要的话，请另订货
3.锁紧盘、防护罩、端板及弹性挡圈均为带锁紧盘联接空心轴的标准配制。
4.被驱动设备的驱动轴表面不得沾有机油或润滑脂。
5.带花键联接的工作机驱动轴，安装时花键需加注润滑脂。
6.带按照DIN332加工的DS型中心孔(螺纹孔)的工作机驱动轴

Note：1.Material of driven equipment shaft: 40cr or steel with higher strength.
2.Driven equipment shaft is not in scope of supply, please order if required.
3.Shrink disc, protection cover, end plate and circlip are supplied with gearbox as standard.
4.Driven equipment shaft shrink disc for connection.Driven machine shaft must be free of oil or grease.
5.Driven machine shaft with involute spline must befilled with grease before installation.
6.Driven machine shaft with DS center hole machined acc. to DIN 332

15 法兰输入和带电机输入(附件代号:UF31)

15 Input with motor and flange input(Code:UF31)

H2

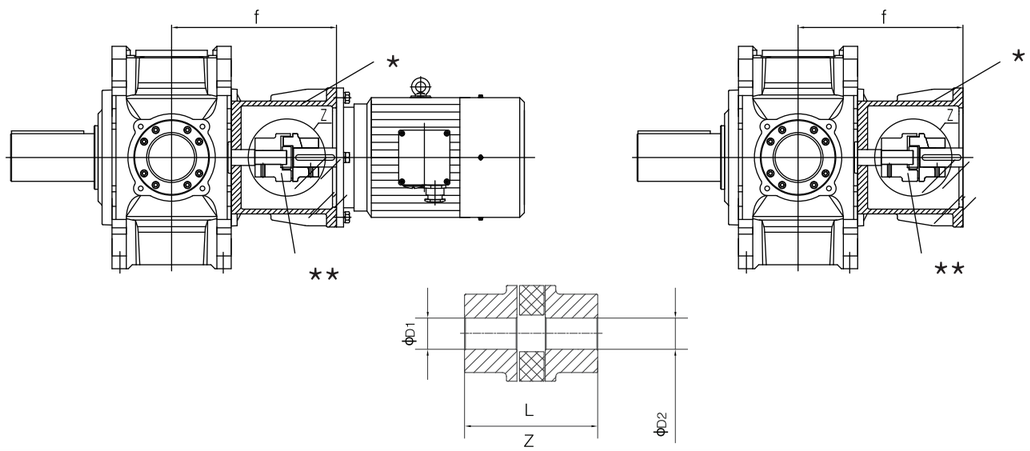

H2			iN≤11.2					iN≥12.5				
Size	Y Motor	F Flange	Coupling				f	Coupling				f
			Type	D1	D2	L		Type	D1	D2	L	
4	160							Ga55	32	42	160	375
	180							GA55	32	48	160	375
	200							GA65	32	55	185	390
	225		Ga65	45	60	185	425	GA65	32	60	185	425
5/6	200							GA65	38	55	185	415
	225							GA65	38	60	185	445
	250		GA75	50	65	210	460	GA75	38	65	210	460
	280		GA75	50	75	210	460	GA75	38	75	210	460
7/8	225							GA65	50	60	185	475
	250		GA75	60	65	210	505	GA75	50	65	210	505
	280		GA75	60	75	210	505	GA75	50	75	210	505
	315*		GA90	60	80	245	530	GA90	50	80	245	530

★ 连接法兰
★★ 联轴器

★ Commection flange
★★ Coupling

H3

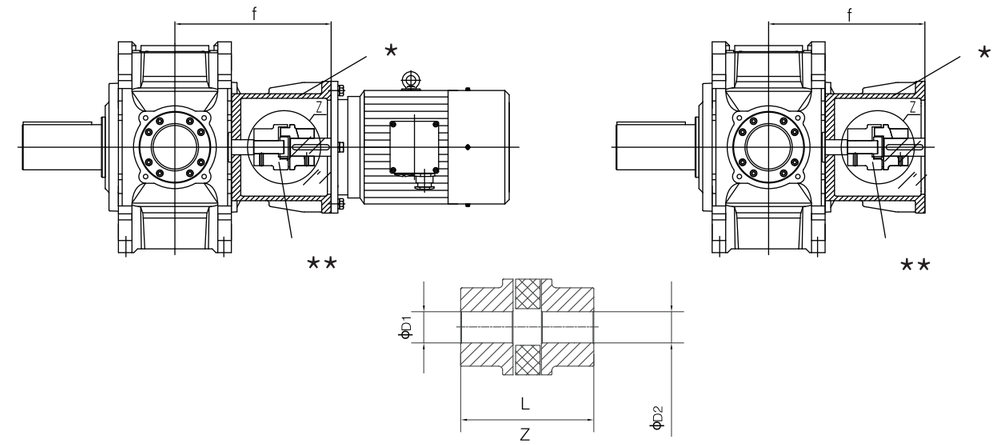

H3			iN≤45(Size:5、6、17) iN≤50(Size:7-16、18)					iN≥50(Size:5、6、17) iN≥56(Size:7-16、18)				
Size	Y Motor	F Flange	Coupling				f	Coupling				f
			Type	D1	D2	L		Type	D1	D2	L	
5/6	132							GA42	30	38	126	311
	160		GA55	40	42	160	360	GA55	30	42	160	360
	180		GA55	40	48	160	360	GA55	30	48	160	360
	200		GA65	40	55	185	375	GA65	30	55	185	376
	225		GA65	40	60	185	404.5	GA65	30	60	185	404.5
7/8	160							GA55	35	42	160	415
	180							GA55	35	48	160	415
	200		GA65	45	55	185	435	GA65	35	55	185	435
	225		GA65	45	60	185	465	GA65	35	60	185	465
	250		GA75	45	65	210	475	GA75	35	65	210	475
	280		GA75	45	75	210	475					
9/10	160							GA55	45	42	160	470
	180							GA55	45	48	160	470
	200		GA65	60	55	185	495	GA65	45	55	185	495
	225		GA65	60	60	185	530	GA65	45	60	185	530
	250		GA75	60	65	210	530	GA75	45	65	210	530
	280		GA75	60	75	210	530					
11/12	225							GA65	50	60	185	535
	250		GA75	70	65	210	565	GA75	50	65	210	565
	280		GA75	70	75	210	565	GA75	50	75	210	565
13/14	250							GA75	60	65	210	615
	280							GA75	60	75	210	615
	315		GA90	85	80	245	675	GA90	60	80	245	675
	355		GA110	85	95	295	675	GA110	60	95	295	675
15/16	250							GA75	75	65	210	660
	280							GA75	75	75	210	660
	315		GA100	100	80	270	755	GA100	75	80	270	755
	355		GA110	100	95	295	755	GA110	75	95	295	755
17/18	315							GA90	75	80	245	725
	355		GA110	100	95	295	790	GA110	75	95	295	790

★ 连接法兰
★★ 联轴器

★ Commection flange
★★ Coupling

H4

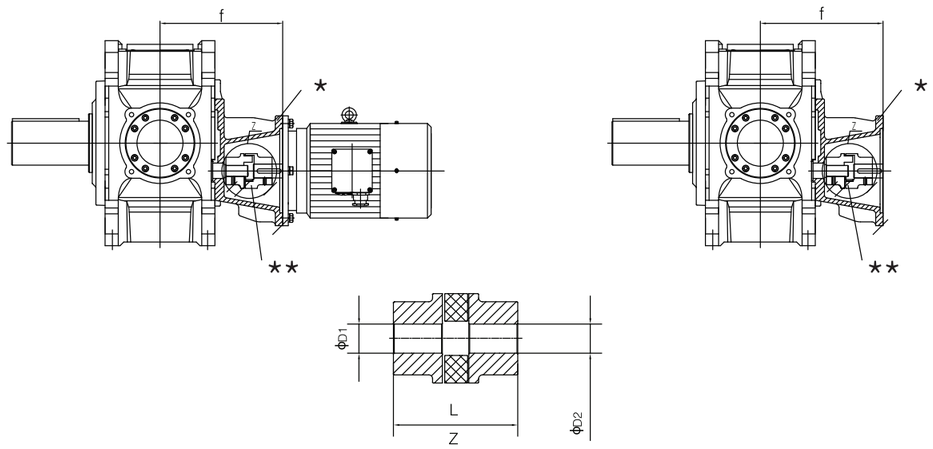

H4			iN≤200(Size：7、8、9、10) iN≤224(Size：11、12)					iN≥224(Size：7、8、9、10) iN≥250(Size：11、12)				
Size	Y Motor	F Flange	Coupling				f	Coupling				f
			Type	D1	D2	L		Type	D1	D2	L	
7/8	132		GA42	30	38	126	335	GA42	24	38	126	335
	160		GA55	30	42	160	385	GA55	24	42	160	385
	180		GA55	30	48	160	385	GA55	24	48	160	385
9/10	132		GA42	35	38	126	370	GA42	28	38	126	370
	160		GA55	35	42	160	420	GA55	28	42	160	420
	180		GA55	35	48	160	420	GA55	28	48	160	420
	200		GA65	35	55	185	435	GA65	28	55	185	435
	225		GA65	35	60	185	465	GA65	28	60	185	465
11/12	160							GA55	32	42	160	480
	180		GA55	45	48	160	480	GA55	32	48	160	480
	200		GA65	45	55	185	490	GA65	32	55	185	490
	225		GA65	45	60	185	510	GA65	32	60	185	510
	250		GA75	45	65	210	515					

★ 连接法兰
★★ 联轴器

★ Commection flange
★★ Coupling

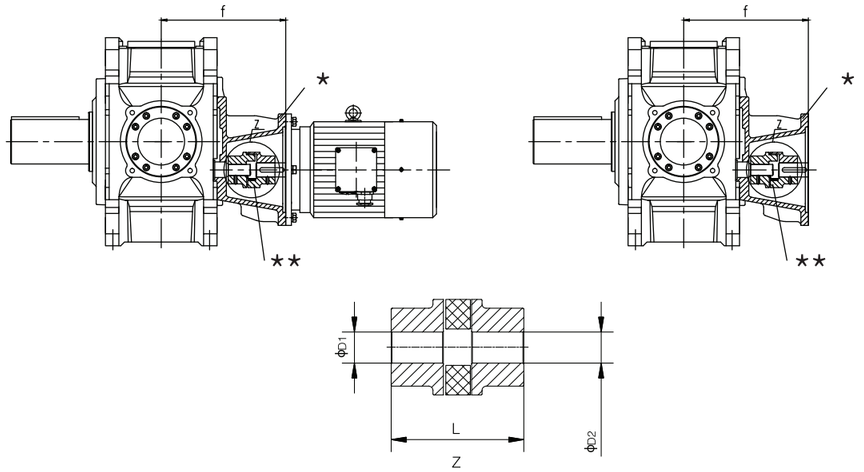

H4			iN≤224(Size：13、14、15、16、18) iN≤200(Size：17)					iN≥250(Size：13、14、15、16、18) iN≥224(Size：17)				
Size	M Motor	F Flange	Coupling				f	Coupling				f
			Type	D1	D2	L		Type	D1	D2	L	
13/14	160							GA55	38	42	160	510
	180							GA55	38	48	160	510
	200		GA65	50	55	185	535	GA65	38	55	185	535
	225		GA65	50	60	185	565	GA65	38	60	185	565
	250		GA75	50	65	210	570	GA75	38	65	210	570
	280		GA75	50	75	210	570					
15/16	200							GA65	50	55	185	575
	225		GA65	60	60	185	635	GA65	50	60	185	635
	250		GA75	60	65	210	635	GA75	50	65	210	635
	280		GA75	60	75	210	635	GA75	50	75	210	635
17/18	225							GA65	50	60	185	640
	250							GA75	50	65	210	670
	280		GA75	60	75	210	670	GA75	50	75	210	670
	315		GA90	60	80	245	700	GA90	50	80	245	700

★ 连接法兰
★★ 联轴器

★ Commection flange
★★ Coupling

B3

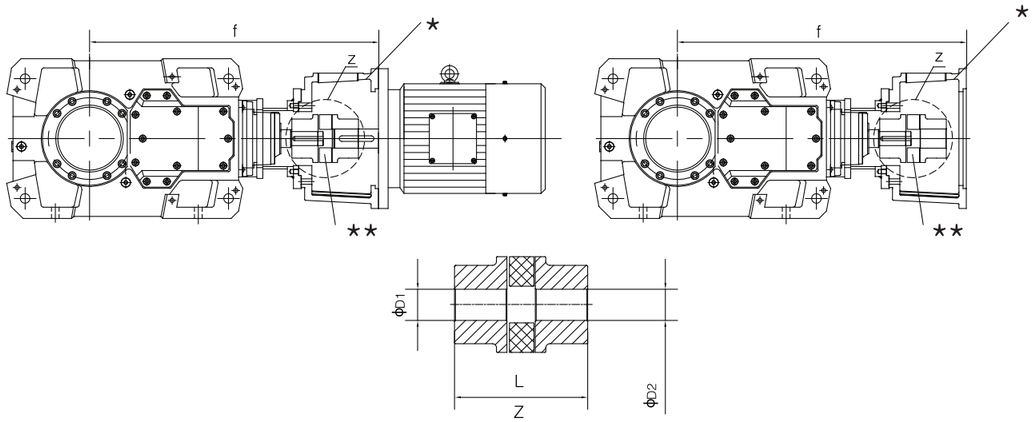

B3			iN≤63					iN≥71				
Size	Y Motor	F Flange	Coupling				f	Coupling				f
			Type	D1	D2	L		Type	D1	D2	L	
4	132							GA42	30	38	126	664
	160		GA55	35	42	160	718	GA55	30	42	160	718
	180		GA55	35	48	160	718	GA55	30	48	160	718
	200		GA65	35	55	185	724					
5	160		GA55	45	42	160	812	GA55	35	42	160	812
	180		GA55	45	48	160	812	GA55	35	48	160	812
	200		GA65	45	55	185	818	GA65	35	55	185	818
	225		GA65	45	60	185	848					
6	160		GA55	45	42	160	847	GA55	35	42	160	847
	180		GA55	45	48	160	847	GA55	35	48	160	847
	200		GA65	45	55	185	853	GA65	35	55	185	853
	225		GA65	45	60	185	883					
7	160							GA55	40	42	160	923
	180							GA55	40	48	160	923
	200		GA65	50	55	185	932	GA65	40	55	185	932
	225		GA65	50	60	185	962	GA65	40	60	185	962
	250		GA75	50	65	210	965	GA75	40	65	210	965
	280		GA75	50	75	210	965					
8	160							GA55	40	42	160	968
	180							GA55	40	48	160	968
	200		GA65	50	55	185	977	GA65	40	55	18	977
	225		GA65	50	60	185	1007	GA65	40	60	185	1007
	250		GA75	50	65	210	1010	GA75	40	65	210	1010
	280		GA75	50	75	210	1010					
9	200							GA65	50	55	185	1067
	225		GA65	60	60	185	1097	GA65	50	60	185	1097
	250		GA75	60	65	210	1100	GA75	50	65	210	1100
	280		GA75	60	75	210	1100	GA75	50	75	210	1100
10	200							GA65	50	55	185	1117
	225		GA65	60	60	185	1147	GA65	50	60	185	1147
	250		GA75	60	65	210	1150	GA75	50	65	210	1150
	280		GA75	60	75	210	1150	GA75	50	75	210	1150
11	225							GA65	60	60	185	1267
	250		GA75	75	65	210	1270	GA75	60	65	210	1270
	280		GA75	75	75	210	1270	GA75	60	75	210	1270
12	225							GA65	60	60	185	1337
	250		GA75	75	65	210	1340	GA75	60	65	210	1340
	280		GA75	75	75	210	1340	GA75	60	75	210	1340

★ 连接法兰
★★ 联轴器

★ Commection flange
★★ Coupling

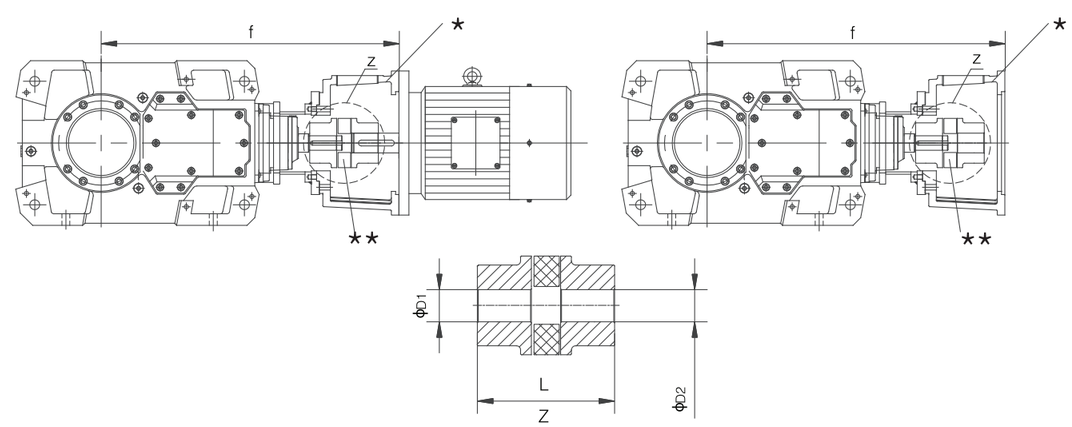

B3			iN≤63(Size:13、14、15、16、18) iN≤56(Size:17)					iN≥71(Size:13、14、15、16、18) iN≥63(Size:17)				
Size	M Motor	F Flange	Coupling				f	Coupling				f
			Type	D1	D2	L		Type	D1	D2	L	
13	250							GA75	70	65	210	1420
	280							GA75	70	75	210	1420
	315		GA90	85	80	245	1474	GA90	70	80	245	1474
	355		GA110	85	95	295	1474	GA110	70	95	295	1474
14	250							GA75	70	65	210	1490
	280							GA75	70	75	210	1490
	315		GA90	85	80	245	1544	GA90	70	80	245	1544
	355		GA110	85	95	295	1544	GA110	70	95	295	1544
15	315		GA110	95	80	295	1731	GA90	75	80	245	1731
	355		GA110	95	95	295	1731	GA110	75	95	295	1731
16	315		GA110	95	80	295	1777	GA90	75	80	245	1777
	355		GA110	95	95	295	1777	GA110	75	95	295	1777
17	315							GA90	90	80	245	1959
	355		GA110	115	95	295	1959	GA110	90	95	295	1959
18	315							GA90	90	80	245	2019
	355		GA110	115	95	185	2019	GA110	90	95	295	2019

★ 连接法兰
★★ 联轴器

★ Commection flange
★★ Coupling

B4

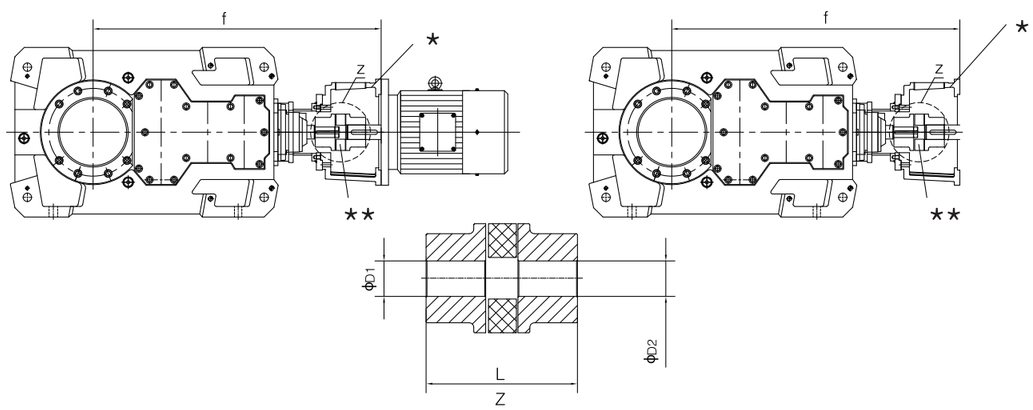

B4			iN≤250(Size：9、10) iN≤280(Size：5、6、7、8、11、12)					iN≥280(Size：9、10) iN≥315(Size：5、6、7、8、11、12)				
Size	Y Motor	F Flange	Coupling				f	Coupling				f
			Type	D1	D2	L		Type	D1	D2	L	
5	132		GA42	35	38	126	784	Ga42	25	38	126	784
	160		GA55	35	42	160	837					
6	132		GA42	35	38	126	819	GA42	25	38	126	819
	160		GA55	35	42	160	872					
7	132		GA42	35	38	126	889	GA42	30	38	126	889
	160		GA55	35	42	160	943	GA55	30	42	160	943
	180		GA55	35	48	160	943	GA55	30	48	160	943
	200		GA65	35	55	185	949					
8	132		GA42	35	38	126	934	GA42	30	38	126	934
	160		GA55	35	42	160	988	GA55	30	42	160	988
	180		GA55	35	48	160	988	GA55	30	48	160	988
	200		GA65	35	55	185	994					
9	132							GA42	35	38	126	1023
	160		GA55	45	42	160	1077	GA55	35	42	160	1077
	180		GA55	45	48	160	1077	GA55	35	48	160	1077
	200		GA65	45	55	185	1083					
	225		GA65	45	60	185	1113					
10	132							GA42	35	38	126	1073
	160		GA55	45	42	160	1127	GA55	35	42	160	1127
	180		GA55	45	48	160	1127	GA55	35	48	160	1127
	200		GA65	45	55	185	1133					
	225		GA65	45	60	185	1163					
11	160							GA55	40	42	160	1243
	180		GA55	50	48	160	1244	GA55	40	48	160	1243
	200		GA65	50	55	185	1252	GA65	40	55	185	1252
	225		GA65	50	60	185	1282	GA65	40	60	185	1282
	250		GA75	50	65	210	1285					
	280		GA75	50	75	210	1285					
12	160							GA55	40	42	160	1313
	180		GA55	50	48	160	1314	GA55	40	48	160	1313
	200		GA65	50	55	185	1322	GA65	40	55	185	1322
	225		GA65	50	60	185	1352	GA65	40	60	185	1352
	250		GA75	50	65	210	1355					
	280		GA75	50	75	210	1355					

★ 连接法兰
★★ 联轴器

★ Commection flange
★★ Coupling

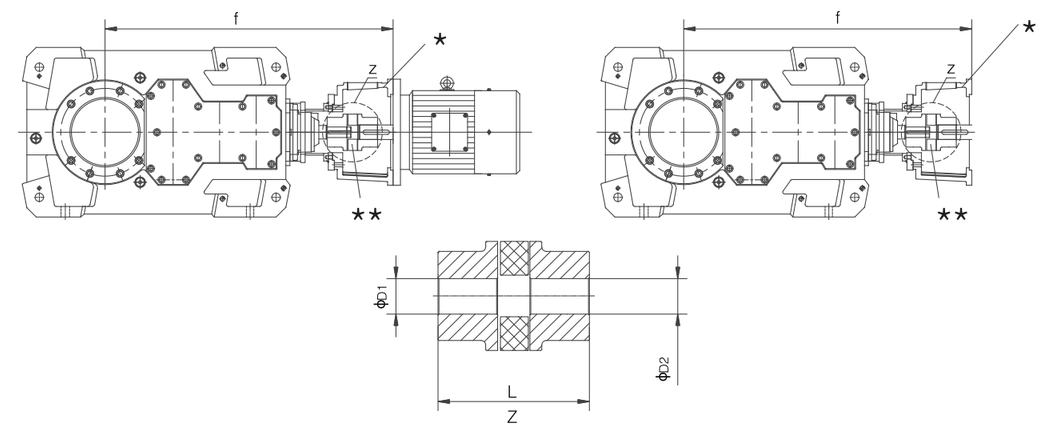

B4			iN≤280(Size：13、14、15、16、18) iN≤250(Size：17)					iN≥315(Size：13、14、15、16、18) iN≥280(Size：17)				
Size	M Motor	F Flange	Coupling				f	Coupling				f
			Type	D1	D2	L		Type	D1	D2	L	
13	180							GA55	50	48	160	1429
	200		GA65	60	55	185	1437	GA65	50	55	185	1437
	225		GA65	60	60	185	1467	GA65	50	60	185	1467
	250		GA75	60	65	210	1470	GA75	50	65	210	1470
	280		GA75	60	75	210	1470	GA75	50	75	210	1470
	315		GA90	60	80	245	1524					
14	180							GA55	50	48	160	1499
	200		GA65	60	55	185	1507	GA65	50	55	185	1507
	225		GA65	60	60	185	1537	GA65	50	60	185	1537
	250		GA75	60	65	210	1540	GA75	50	65	210	1540
	280		GA75	60	75	210	1540	GA75	50	75	210	1540
	315		GA90	60	80	245	1594					
15	200							GA65	60	55	185	1679
	225		GA75	75	60	210	1709	GA65	60	60	185	1709
	250		GA75	75	65	210	1712	GA75	60	65	210	1712
	280		GA75	75	75	210	1712	GA75	60	75	210	1712
	315		GA90	75	80	245	1766	GA90	60	80	245	1766
	355		GA110	75	95	295	1766					
16	200							GA65	60	55	185	1725
	225		GA75	75	60	210	1755	GA65	60	60	185	1755
	250		GA75	75	65	210	1758	GA75	60	65	210	1758
	280		GA75	75	75	210	1758	GA75	60	75	210	1758
	315		GA90	75	80	245	1812	GA90	60	80	245	1812
	355		GA110	75	95	295	1812					
17	225							GA65	60	60	185	1757
	250							GA75	60	65	210	1760
	280		GA75	75	75	210	1760	GA75	60	75	210	1760
	315		GA90	75	80	245	1814	GA90	60	80	245	1814
	355		GA110	75	95	295	1814					
18	225							GA65	60	60	185	1817
	250							GA75	60	65	210	1820
	280		GA75	75	75	210	1820	GA75	60	75	210	1820
	315		GA90	75	80	245	1874	GA90	60	80	245	1874
	355		GA110	75	95	295	1874					

★ 连接法兰
★★ 联轴器

★ Commection flange
★★ Coupling

16 附件

16 Accessory

16.1冷却风扇(附件代号:UF21)

16.1 Cooling fan (Accessory code:UF21)

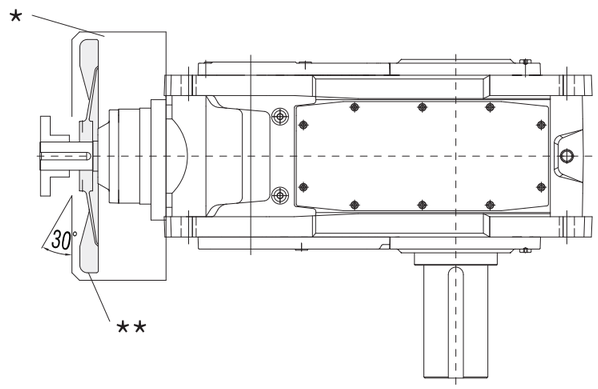

★ 风扇罩
★★ 冷却风扇

★ Fan cover
★★ Cooling fan

16.2 水油冷却器(附件代号:UC22)

16.2 Water oil cooler (Accessory code:UC22)

16.2.1 卧式安装

16.2.1 Horizontal mounting

H2..H,H3..H,B2..H,B3..H

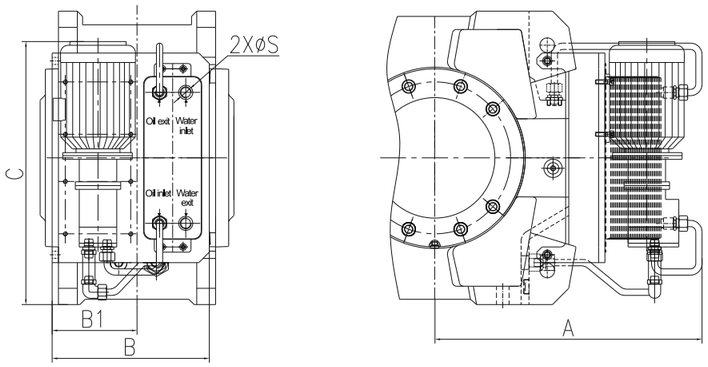

Size	A	B	B1	C	S	Water quantity (L/min)
04	435	225	117.5	429	G1/2	5
05	480	265	139.5	452	G1/2	5
06	525	265	139.5	452	G1/2	5
07	510	306	162	502	G1/2	5
08	580	306	162	502	G1/2	5
09	545	360	201	602	G1/2	5
10	595	360	201	602	G1/2	5
11	585	360	231	670	G1/2	5
12	670	360	231	670	G1/2	5
13	772	405	288.5	714	G1/2	10
14	842	405	288.5	714	G1/2	10
15	883	405	326	774	G1/2	10
16	925	405	326	774	G1/2	10
17	929	405	356	849	G1/2	14
18	989	405	356	849	G1/2	14

16.2.2 立式安装

16.2.2 Vertical mounting

H2..V,H3..V,B2..V,B3..V

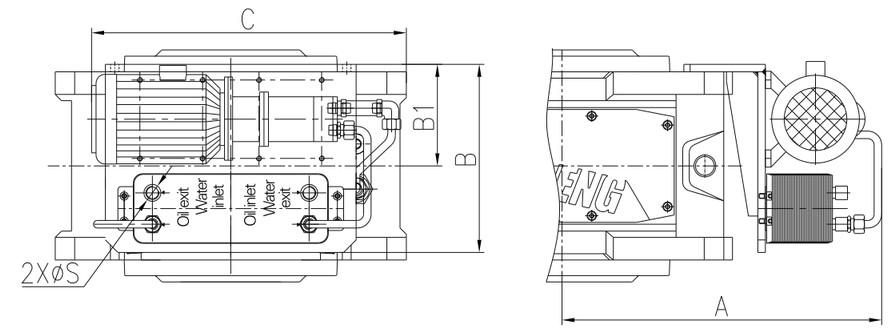

Size	A	B	B1	C	S	Water quantity (L/min)
04	435	225	117.5	429	G1/2	5
05	480	265	139.5	452	G1/2	5
06	525	265	139.5	452	G1/2	5
07	510	306	162	502	G1/2	5
08	580	306	162	502	G1/2	5
09	545	360	201	602	G1/2	5
10	595	360	201	602	G1/2	5
11	585	360	231	670	G1/2	5
12	670	360	231	670	G1/2	5
13	772	405	288.5	714	G1/2	10
14	842	405	288.5	714	G1/2	10
15	883	405	326	774	G1/2	10
16	925	405	326	774	G1/2	10
17	929	405	356	849	G1/2	14
18	989	405	356	849	G1/2	14

16.3 齿轮箱内置冷却盘管(附件代号:UC21)

16.3 Cooling coil (Accessory code:UC21)

16.3.1 卧式安装

16.3.1 Horizontal mounting

H2..H,H3..H,B2..H,B3..H

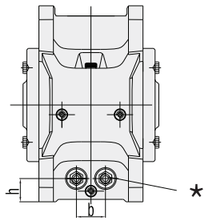

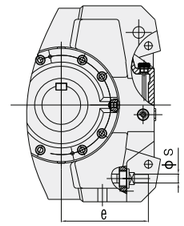

Type	H2..H / B3..H					H3..H					B2..H				
	b	e	h	s	Water quantity (L/min)	b	e	h	s	Water quantity (L/min)	b	e	h	s	Water quantity (L/min)
04	60	192	48	G1/2	6	–	–	–	–	–	60	192	48	G1/2	10
05	70	206	64	G1/2	6	70	200	64	G1/2	6	70	211	64	G1/2	10
06	70	254	55	G1/2	6	70	246	55	G1/2	6	70	253	55	G1/2	10
07	70	236	80	G1/2	6	70	236	80	G1/2	6	70	241	80	G1/2	10
08	70	283	75	G1/2	6	70	283	75	G1/2	6	70	293	75	G1/2	10
09	70	267.5	70	G1/2	10	70	267.5	70	G1/2	6	70	267.5	70	G1/2	10
10	70	316	70	G1/2	10	70	316	70	G1/2	6	70	316	70	G1/2	10
11	70	296	90	G1/2	10	70	296	90	G1/2	10	70	302	90	G1/2	10
12	70	381	90	G1/2	10	70	381	90	G1/2	10	70	386	90	G1/2	10
13	150	386	120	G1/2	10	150	386	120	G1/2	10	150	386	120	G1/2	10
14	150	456	120	G1/2	10	150	446	120	G1/2	10	150	446	120	G1/2	10
15	200	439	120	G1/2	10	200	424	120	G1/2	10	200	424	120	G1/2	10
16	200	494	120	G1/2	10	200	494	120	G1/2	10	200	494	120	G1/2	10
17	/	/	/	/	/	/	/	/	/	/	/	/	/	/	/
18	/	/	/	/	/	/	/	/	/	/	/	/	/	/	/

★ 冷却盘管接口尺寸 ★ Cooling coil water connection

16.3.2 立式安装

16.3.2 Vertical mounting

H2..V,H3..V,B2..V,B3..V

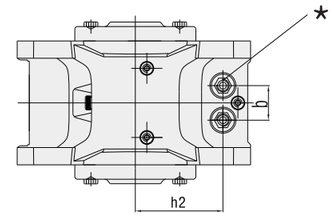

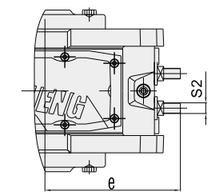

Type	H2..V / B3..V					H3..V					B2..V				
	b	e	h2	s2	Water quantity (L/min)	b	e	h2	s2	Water quantity (L/min)	b	e	h2	s2	Water quantity (L/min)
04	60	192	152	G1/2	6	–	–	–	–	–	60	192	152	G1/2	10
05	70	206	166	G1/2	6	70	200	166	G1/2	6	70	211	166	G1/2	10
06	70	254	175	G1/2	6	70	246	175	G1/2	6	70	253	175	G1/2	10
07	70	236	200	G1/2	6	70	236	200	G1/2	6	70	241	200	G1/2	10
08	70	283	205	G1/2	6	70	283	205	G1/2	6	70	293	205	G1/2	10
09	70	267.5	250	G1/2	10	70	267.5	250	G1/2	6	70	267.5	250	G1/2	10
10	70	316	250	G1/2	10	70	316	250	G1/2	6	70	316	250	G1/2	10
11	70	296	290	G1/2	10	70	296	290	G1/2	10	70	302	290	G1/2	10
12	70	381	290	G1/2	10	70	381	290	G1/2	10	70	386	290	G1/2	10
13	150	386	120	G1/2	10	150	386	120	G1/2	10	150	386	120	G1/2	10
14	150	456	120	G1/2	10	150	446	120	G1/2	10	150	446	120	G1/2	10
15	200	439	120	G1/2	10	200	424	120	G1/2	10	200	424	120	G1/2	10
16	200	494	120	G1/2	10	200	494	120	G1/2	10	200	494	120	G1/2	10
17	/	/	/	/	/	/	/	/	/	/	/	/	/	/	/
18	/	/	/	/	/	/	/	/	/	/	/	/	/	/	/

★ 冷却盘管接口尺寸 ★ Cooling coil water connection

类别 Type	冷却盘管适用于 Cooling coil is appropriate for		
	机座号 Size	补偿油箱浸油润滑 Compensation, oil tankdip-in lubrication	法兰泵强制润滑 Flange pump forced lubrication	电机油泵强制润滑 Motor,oil pump,forced lubrication
		适用布置形式 Applicable shaft assemblies	适用布置形式 Applicable shaft assemblies	适用布置形式 Applicable shaft assemblies
H2..V	04 - 12	A+B+C+D+E+F+G+H+I	B+D+F+H	B+D+F+H
H3..V	05 - 12	A+B+C+D+E+F+G+H+I	B+D+F+H	B+D+F+H
B2..V	04 - 12	A+B+C+D+E+F	C+D+F	C+D+F
B3..V	04 - 12	A+B+C+D+E+F	C+D+F	C+D+F
H2..V	13 - 18		B+D+F+H	B+D+F+H
H3..V	13 - 18		B+D+F+H	B+D+F+H
B2..V	13 - 18		C+D+F	C+D+F
B3..V	13 - 18		C+D+F	C+D+F

16.4 电机油泵强制润滑(附件代号:US32)

16.4 Motor oil pump forced lubrication(Accessory code:US32)

H3..V,H4..V

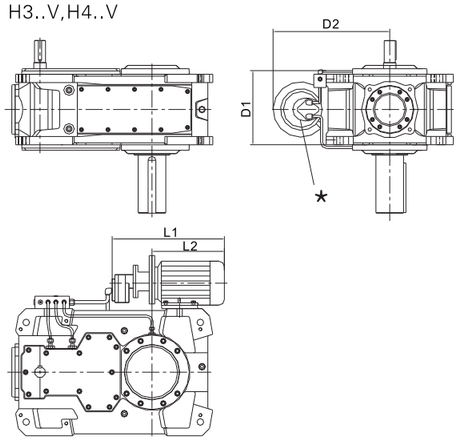

B2..V,B3..V,B4..V

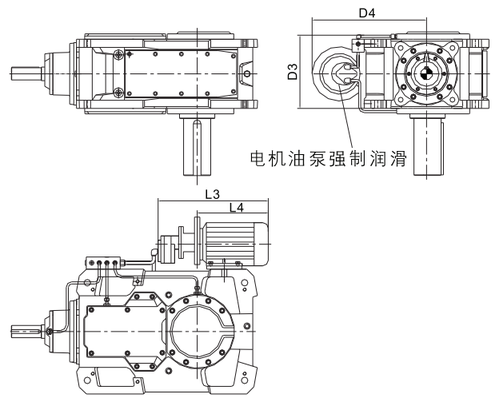

★ 电机油泵强制润滑

★ Moror oil pumpforced lubrication

Mounting dimension						
Type	Size	Shaft assemblies	L2	L1	D2	D1
H2...V	04	A+B+C+D+E+F+G+H+I	210	356	361	228
	05/06	A+B+C+D+E+F+G+H+I	262/307	406	422	268
	07/08	A+B+C+D+E+F+G+H+I	292/352	406	472	315
	09/10	A+B+C+D+E+F+G+H+I	317/367	406	512	383
	11/12	A+B+C+D+E+F+G+H+I	342/406	406	572	448
H3...V	05/06	A+B+C+D+E+F+G+H+I	262/307	406	422	268
	07/08	A+B+C+D+E+F+G+H+I	292/352	406	472	315
	09/10	A+B+C+D+E+F+G+H+I	317/367	406	512	383
	11/12	A+B+C+D+E+F+G+H+I	342/406	406	572	448
H4...V	07/08	A+B+C+D+E+F+G+H+I	292/352	406	472	315
	09/10	A+B+C+D+E+F+G+H+I	317/367	406	512	383
	11/12	A+B+C+D+E+F+G+H+I	342/406	406	572	448
H2...V	13/14	A+B+C+D+E+F+G+H+I	484/554	456	642	566
	15/16	A+B+C+D+E+F+G+H+I	544/589	456	702	640
	17/18	A+B+C+D+E+F+G+H+I	569/629	460	752	701
H3...V	13/14	A+B+C+D+E+F+G+H+I	484/554	456	642	566
	15/16	A+B+C+D+E+F+G+H+I	544/589	456	702	640
	17/18	A+B+C+D+E+F+G+H+I	569/629	460	752	701
H4...V	13/14	A+B+C+D+E+F+G+H+I	484/554	456	642	566
	15/16	A+B+C+D+E+F+G+H+I	544/589	456	702	640
	17/18	A+B+C+D+E+F+G+H+I	569/629	460	752	701

Mounting dimension						
Type	Size	Shaft assemblies	L4	L3	D4	D3
B2...V	04	A+B+C+D+E+F+G+H+I	210	356	361	263
	05/06	A+B+C+D+E+F+G+H+I	262/307	406	422	313
	07/08	A+B+C+D+E+F+G+H+I	292/352	406	472	370
	09/10	A+B+C+D+E+F+G+H+I	317/367	406	512	438
	11/12	A+B+C+D+E+F+G+H+I	342/406	406	572	513
B3...V	04	A+B+C+D+E+F+G+H+I	210	356	361	228
	05/06	A+B+C+D+E+F+G+H+I	262/307	406	422	268
	07/08	A+B+C+D+E+F+G+H+I	292/352	406	472	315
	09/10	A+B+C+D+E+F+G+H+I	317/367	406	512	383
	11/12	A+B+C+D+E+F+G+H+I	342/406	406	572	448
B4...V	05/06	A+B+C+D+E+F+G+H+I	262/307	406	422	268
	07/08	A+B+C+D+E+F+G+H+I	292/352	406	472	315
	09/10	A+B+C+D+E+F+G+H+I	317/367	406	512	383
	11/12	A+B+C+D+E+F+G+H+I	342/406	406	572	448
B2...V	13/14	A+B+C+D+E+F+G+H+I	484/554	456	642	566
	15/16	A+B+C+D+E+F+G+H+I	544/589	456	702	640
	17/18	A+B+C+D+E+F+G+H+I	569/629	460	752	701
B3...V	13/14	A+B+C+D+E+F+G+H+I	484/554	456	642	566
	15/16	A+B+C+D+E+F+G+H+I	544/589	456	702	640
	17/18	A+B+C+D+E+F+G+H+I	569/629	460	752	701
B4...V	13/14	A+B+C+D+E+F+G+H+I	484/554	456	642	566
	15/16	A+B+C+D+E+F+G+H+I	544/589	456	702	640
	17/18	A+B+C+D+E+F+G+H+I	569/629	460	752	701

16.5逆止器(附件代号:UB11)

16.5 Backstop (Accessory code Ub11)

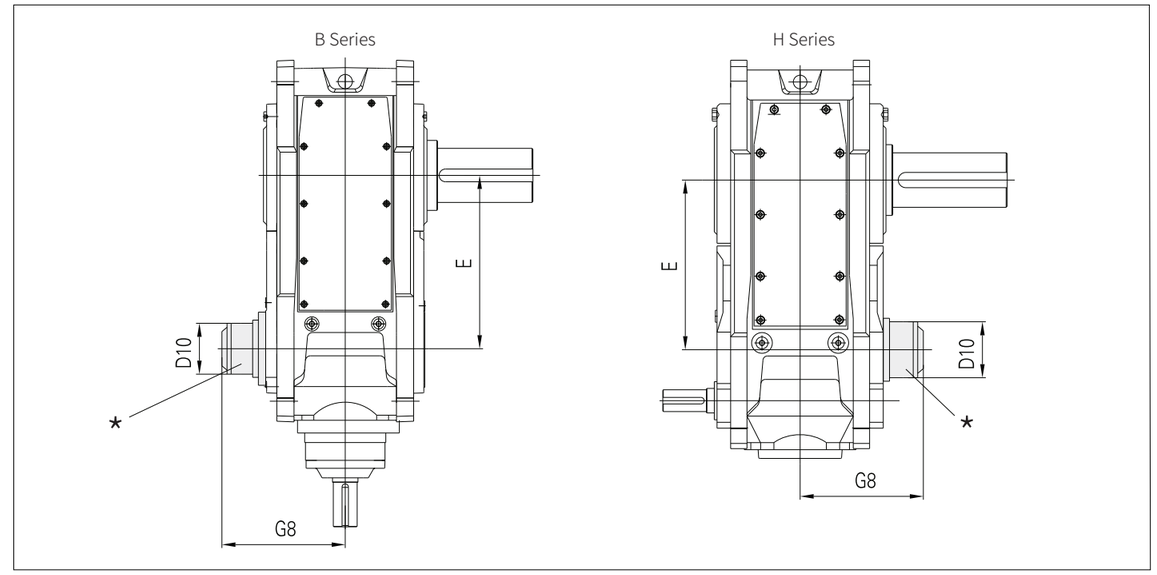

★ 逆止器

★ Backstop

Size	04			05			06			07			08		
	D10	G8	E	D10	G8	E	D10	G8	E	D10	G8	E	D10	G8	E
B2	175	218	177	190	250	201	190	250	240	230	298	240	230	298	280
B3	125	190.5	270	150	215.5	315	150	215.5	350	175	256	385	175	256	430
B4/H4				95	208.5	405	95	208.5	440	125	243	495	125	243	540
H3				150	215.5	311.5	150	215.5	346.5	175	256	375	175	256	420

Size	09			10			11			12			13		
	D10	G8	E	D10	G8	E	D10	G8	E	D10	G8	E	D10	G8	E
B2	290	353	280	290	353	340	322	394	340	322	394	390			
B3	190	298	450	190	298	500	230	355	545	230	355	615	290	426	635
B4/H4	125	271	580	125	271	630	150	313	705	150	313	775	175	373	820
H3	190	298	440	190	298	490	230	355	530	230	355	600	290	426	610

Size	14			15			16			17			18		
	D10	G8	E	D10	G8	E	D10	G8	E	D10	G8	E	D10	G8	E
B3	290	426	705	310	472	762	310	472	808	310	498	860	310	498	920
B4/H4	175	373	890	230	465	987	230	465	1033	230	495	1035	230	495	1095
H3	290	426	680	310	472	731	310	472	777	310	502	779	310	502	839

注:旋转方向是指面向输出轴时输出轴d的旋转方向。

Note: The rotation direction is the direction of output shaftd while face the output shaft.

16.6 补偿油箱(附件代号:US33)与轴端油泵(附件代号:US31)

16.6 Oil compensation tank (Accessory code:US33)and shaft end oil pump (Accessory code:US31)

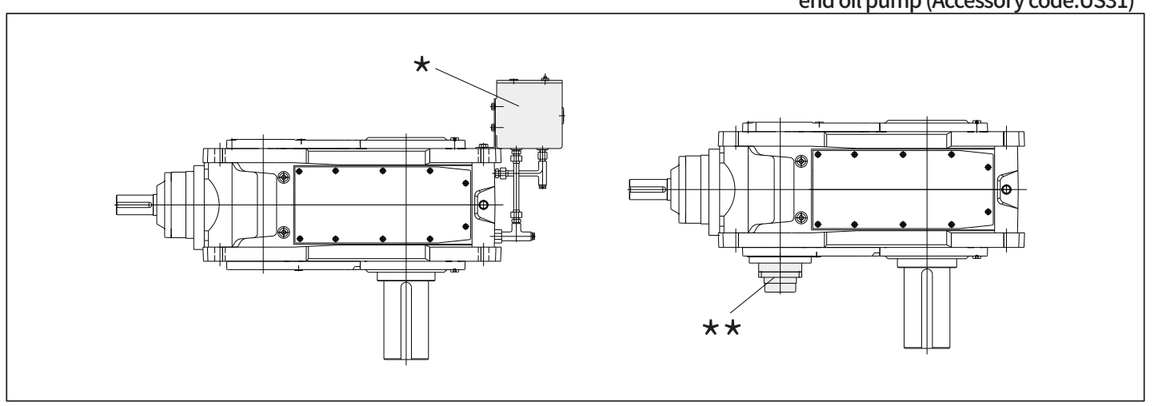

★ 补偿油箱
★★ 轴端油泵
选型时需提供输入转速

★ Oil compensating tank
★★ Shaft end oil pump Running speed should be provided for selection

输入转速限制		Input speed limit	
Type	Size	US33	US31
		n1<	n1>
H2..V	04-12	1500	900
H3..V	05-12	1500	1200
H4..V	07-12	1800	1200
B2..V	04-12	1500	1200
B3..V	04-12	1500	1200
B4..V	05-12	1800	1200

16.7 润滑油

16.7.1 油量表

16.7 Lubrication oil

16.7.1 Oil quantity

Oil Quantity Table (L)																	
Size	H2..H	H3..H	H4..H	B2..H	B3..H	B4..H	H2..V		H3..V		H4..V		B2..V		B3..V		B4..V	
	①	①	①	①	①	①	②	③	②	③	②	③	②	③	②	③	②	③
04	10	—	—	10	9	—	27	—	—	—	—	—	28	—	28	—	—	—
05	15	15	—	16	14	16	25	13	37	17	—	—	41	20	32	12	36	15
06	16	17	—	19	15	18	29	14	40	20	—	—	50	23	35	13	40	16
07	27	28	25	31	25	30	62	29	64	33	54	25	75	35	52	22	60	30
08	30	30	27	34	28	33	66	33	77	39	64	33	90	38	67	28	70	35
09	42	45	48	48	40	48	107	55	107	52	102	49	115	53	115	48	110	60
10	45	46	50	50	42	50	124	58	115	54	114	53	135	60	125	52	130	67
11	71	85	80	80	66	80	165	78	177	85	173	83	190	86	180	75	180	75
12	76	90	87	95	72	90	190	91	210	100	208	100	215	95	200	85	195	85

Oil Quantity Table (L)												
Size	H2..H	H3..H	H4..H	B2..H	B3..H	B4..H	H2..V	H3..V	H4..V	B2..V	B3..V	B4..V
	①	①	①	①	①	①	③	③	③	③	③	③
13	135	160	130	140	130	145	149	176	143	154	143	160
14	140	165	140	155	140	150	154	182	154	171	154	165
15	210	235	230	220	210	230	232	240	250	243	230	240
16	215	245	235	230	220	235	237	270	259	253	242	259
17	290	305	290	320	290	295	319	336	319	352	319	325
18	300	315	305	335	300	305	321	320	315	342	315	315

Oil Quantity Table (L)						
Size	H2..H	H3..H	H4..H	B2..H	B3..H	B4..H
	①	①	①	/	①	①
19	441	441	430	/	430	480
20	500	506	500	/	491	550
21	540	552	545	/	535	600
22	590	598	590	/	580	650
23	640	653	645	/	634	710
24	720	753	745	/	710	810
25	900	920	910	/	892	1000
26	1040	1058	1050	/	1026	1150

注:1.①油池飞溅润滑;②浸油润滑;③强制润滑。
2.以上数据为平均值。

Note: 1.①Oil tank splash lubrication; ②Dip-in lubrication; ③Forced lubrication.
2.The above data are average values.

16.7.2润滑油(重负荷工业齿轮油)粘度牌号选用

[VG320(附件代号:UV32)]

16.7.2 Lubrication oil (heavy-loading industrial gear oil) viscosity number selection [VG320(Accessory code:UV32)

环境温度°C	环境温度°C	Ambient temperature°C	-20℃~+40℃
粘度牌号	粘度牌号	Viscosity number	VG320

注:1.上表中粘度牌号为40C温度下的ISO-VG粘度。
2.环境温度低于-10C必须使用合成油。
3.为保证产品寿命,实际使用中建议使用合成油。
4.若环境温度超出上述范围,敬请垂询。

Note: 1.Viscosity in the above table is ISO-VG Viscosity under 40 C
2.When ambient temperature is lower than-10°C,synthetic oil must be used.
3.To ensure product lifespan, we suggest synthetic oil.
4.IF ambient temperature exceeds the above range, please consult.

16.8 扭力臂(附件代号:UT61)

16.8 Torque arm (Code:UT61)

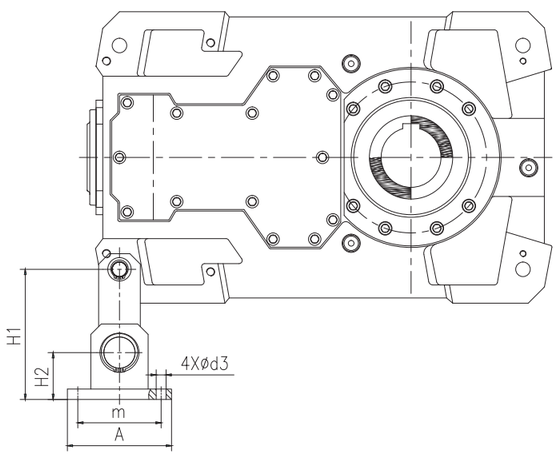

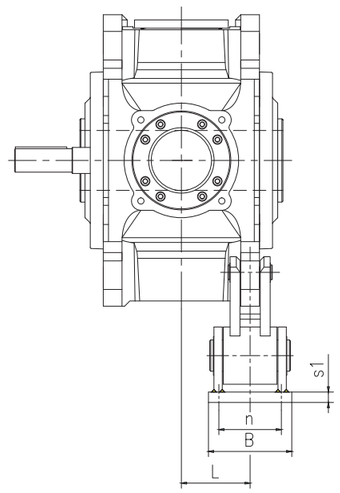

Size	A	B	Φd3	H1	H2	m	n	s1	L		Weight (kg)
									B2	B3/B4/H2/H3/H4	
04	160	110	19	200	65	120	70	15	120	92.5	7.4
05	160	110	19	200	65	120	70	15	145	112.5	7.6
06	160	110	19	200	65	120	70	15	145	112.5	7.6
07	200	160	19	250	90	160	120	20	172	132	19.9
08	200	160	19	250	90	160	120	20	172	132	19.9
09	200	160	19	250	90	160	120	20	196	162.5	19.3
10	200	160	19	250	90	160	120	20	196	162.5	19.3
11	320	280	19	360	130	260	130	25	238	188	53.6
12	320	280	19	360	130	260	130	25	238	188	53.6
13	320	280	19	360	130	260	130	25	272.5	220	73.1
14	320	280	19	360	130	260	130	25	272.5	220	73.1
15	400	300	24	455	160	320	240	30	317.5	247.5	117.7
16	400	300	24	455	160	320	240	30	317.5	247.5	117.7
17	400	300	24	455	160	320	240	30	370	272.5	117.7
18	400	300	24	455	160	320	240	30	370	272.5	117.7

16.9 输出安装法兰 (附件代号:UF32)

16.9 Outpt mounting flange (Code:UF32)

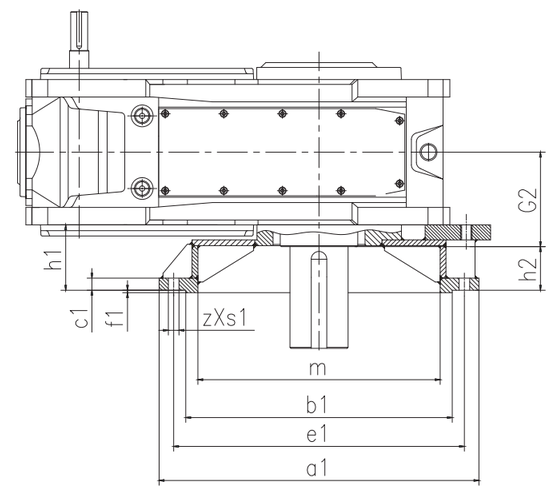

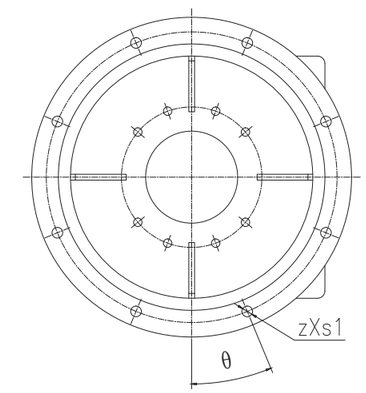

Size	a1	b1	c1	e1	f1	G2	h2	m	θ	zxs1	h1		Weight (kg)
											B2	B3/B4/H2/H3/H4	
04	450	350f7	24.5	400	5	140	50	300	22.5°	8xΦ17.5	75	82.5	36
05	550	450f7	25	500	5	165	52.5	420	22.5°	8xΦ17.5	77.5	90	48
06	550	450f7	25	500	5	165	52.5	420	22.5°	8xΦ17.5	77.5	90	52
07	660	550f7	25	600	5	195	90	500	22.5°	8xΦ22	120	135	81
08	660	550f7	30	600	5	195	90	500	22.5°	8xΦ22	120	135	81
09	660	550f7	29	600	6	235	84	500	15°	12xΦ22	114	134	98
10	660	550f7	34	600	6	235	84	500	15°	12xΦ26	114	134	102
11	800	680f7	44	740	6	270	129	620	15°	12xΦ26	169	184	182
12	800	680f7	44	740	6	270	129	620	15°	12xΦ26	169	184	226
13	840	650f7	50	760	5	335	37.5	450	15°	12xM30	77.5	100	245
14	840	650f7	50	760	5	335	37.5	480	15°	12xM30	77.5	100	255
15	960	750f7	50	880	5	380	30	530	11.25°	16xM30	65	100	315
16	960	750f7	50	880	5	380	30	540	11.25°	16xM30	65	100	325
17	1100	850f7	57	1000	8	415	62	540	11.25°	16xM36	107	137	595
18	1100	850f7	57	1000	8	415	62	540	11.25°	16xM36	107	137	605

16.10 附件代号一览表　　16.10 Accessories code table

代号 Code	附件	Accessories	示例 Example
UB11	逆止器	Backstop	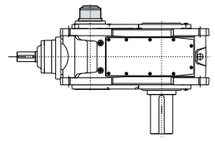
UC22	水油冷却器	Water-Oil cooler	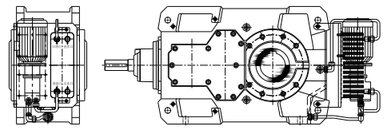
UF21	冷却风扇	Cooling fan	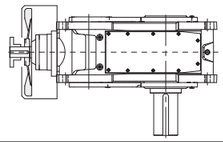
UF31	输入连接法兰	Input connection flange	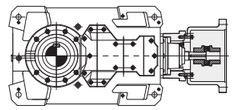
US31	轴端油泵强制润滑	Shaft end oil pump forced lubrication	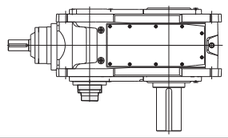
US32	电机油泵强制润滑	Motor oil pump forced lubrication	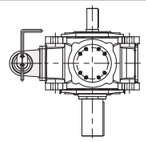
US33	补偿油箱浸油润滑	Oil compensation tank dip-in oil lubrication	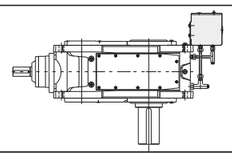
UV32	润滑油 VG320	Lubrication oil VG320	

代号 Code	附件	Accessories	示例 Example
敬请垂询 Please consult	扭力臂 UT61	Torque arm UT61	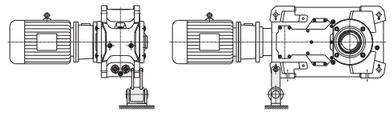
	齿轮箱浮动底座	Gear box swing base	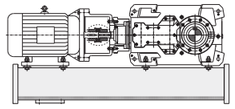
	浮动底座扭力臂	Swing base with torque arm	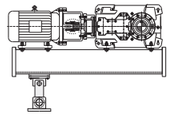
	安装法兰 UF32	Mounting flange UF32	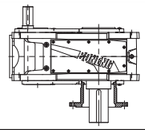
	外置风冷式油冷却器UC23	External wind air-oil cooler UC23	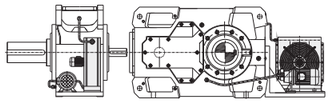
	配管路(客户带稀油站)	Pipeline(Customer build oil station)	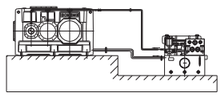
	配稀油站	Oil station	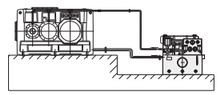
	竖直安装	Upright mounting	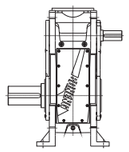
	电加热器	Electric heater	
	其他类型的轴封	Shaft sealing of other categories	

随着技术迭代进步，博能产品样本将会同步更新，请见谅。
Along with the technology advancedet.,the product of the manual of Boneng will be changed,please forgive.

控制层 CONTROL

驱动层 DRIVE

马达层 MOTOR

齿轮层 GEAR

X7030 X7050
系列控制器
EtherCAT&Modbus

X3050 运动控制器
Motion Controller
EtherCAT&Modbus
24VDC

C/F/K/S-M
*・・・D
马达分布式
变频驱动器
Integrated
Gearmotor
Drive

EtherCAT&
Modbus
380~480VAC
0.25~3kW
i=4~355

AM 变频驱动器
Variable Frequency Drive

Modbus
380~480VAC
0.75~5.5kW

A1 变频驱动器
Variable Frequency Drive

Modbus/CANopen
/PROFINET
380~480VAC
0.75~250kW

C/F/K/S/R
齿轮马达
Gearmotor

380~480VAC
0.09~200kW
i=1.25~500

MP/MU
三相交流异步马达
AsynchronousMotor

380~480VAC
0.09~90kW
960/1450r/min
1160/1750r/min

MX&AX
伺服马达&伺
服驱动器
Permanent
Magnet
Servo Motor
&Servo Drive

EtherCAT/
PROFINET
380~480VAC
0.28~14kW
1500/2000r/min
3000/4500r/min

C/F/K-MX
&AX齿轮伺
服马达&伺
服驱动器
Servo
Gearmotor
&Servo Drive

EtherCAT/
PROFINET
380~480VAC
0.28~14kW
i=1.25~315

PX-MX&AX
行星伺服马达
&伺服驱动器
Planetary
Precision Gear
Servo Motor
&Servo Drive

EtherCAT/
PROFINET
380~480VAC
0.38~14kW
i=3~100

PN-MN&AN
行星伺服马达
&伺服驱动器
Planetary
Precision Gear
Servo Motor
&Servo Drive

EtherCAT
PROFINET
380~480VAC
0.28~5.03kW
i=3~100

ME&AN
永磁同步伺服马
达&伺服驱动器
Permanent
Magnet
Servo Motor
&Servo Drive

EtherCAT/
PROFINET
200~240VAC
0.1kW~1.2kW

HB/BE/HK
齿轮箱
Gearbox

4.2~15775kW
i=5.6~450

P/PK
行星齿轮箱
Planetary
Gearbox

0.4~14000kW
i=25~4000

PW
卷扬齿轮箱
Planetary
Winch
Gearbox

1~1810kW
i=13~940

PS
回转齿轮箱
Planetary
Slewing
Gearbox

1~1626kW
i=14~947

J/JB
升降机
Jack

0.35~22.63kW
i=5~34

T
转向箱
Spiral Bevel
Gearbox

0.08~303kW
i=1:1~3:1

博能传动（沈阳）有限公司

辽宁省沈阳市沈北新区
太平洋工业城A区A73-6号
电话：024-31271571

BONENG TRANSMISSION(SHENYANG)CO.,LTD.

No. A73-6, Area A, Pacific Industrial City,
Shenbei New District, Shenyang, Liaoning
Province, China
TEL: 024-31271571

博能传动（天津）有限公司

天津市北辰区双海道6号
宏鹏工业园7号车间
电话：022-26929556

BONENG TRANSMISSION(TIANJIN)CO.,LTD.

7th Workshop, Hongpeng Industrial Park, No. 6
Shuanghai Road, Beichen District, Tianjin
City,China
TEL: 022-26929556

博能传动（潍坊）有限公司

山东省潍坊市安丘市经济开发区
汶水路与昆仑大街交叉口往北
100米路东1号车间
电话：0536-2141166

BONENG TRANSMISSION(WEIFANG)CO.,LTD.

1st Workshop, Economic Development Zone,
Anqiu, Weifang City, Shandong Province, China
TEL: 0536-2141166

博能传动（开封）有限公司

河南省开封市宋城路四大街11号
海神机械院内五号厂房
电话：0371-23335238

BONENG TRANSMISSION(KAIFENG)CO.,LTD.

5th Workshop, Haishen Machinery, No.11,
Fourth Street, Songcheng Road,New District,
Kaifeng City, Henan Province, China
TEL: 0371-23335238

博能传动（长沙）有限公司

湖南省长沙市望城经济开发区
普瑞大道1288号
电话：0731-88386958

BONENG TRANSMISSION(CHANGSHA)CO.,LTD.

No. 1288 Puri Avenue, Wangcheng Economic
Development Zone, Changsha City, Hunan
Province, China
TEL: 0731-88386958

博能传动设备（成都）有限公司

四川省成都市金牛区金牛坝路9号5栋
向荣中心A座7楼5号
电话：028-87741100

BONENG TRANSMISSION EQUIPMENT(CHENGDU) CO., LTD.

No. 5, 7th Floor, Block A, Xiangrong Center,
Building 5, No. 9 Jinniuba Road, Jinniu District,
Chengdu City, Sichuan Province, China
TEL: 028-87741100

博能传动（肇庆）有限公司

广东省肇庆市鼎湖区肇庆新区
科创大道7号平谦国际现代产业园
一期A12北厂房
电话：0757-86719757

BONENG TRANSMISSION(ZHAOQING)CO.,LTD.

No. 7 Science and Technology
Innovation Avenue, Zhaoqing New Area,
Dinghu District, Zhaoqing City,
Guangdong Province, China
TEL: 0757-86719757

博能传动（苏州）有限公司

江苏省苏州市相城区如元路100号
电话：0512-66189662

BONENG TRANSMISSION(SUZHOU)CO.,LTD.

No. 100, Ruyuan Road, Xiangcheng
District, Suzhou, Jiangsu Province, China
TEL: 0512-66189662

博能传动（美国）有限公司

1250 E 222nd Euclid, OH 44117,
United Staes
TEL: 1-216-618-0138
TEL: 1-216-618-0496
TEL: 1-216-618-3099

BONENG TRANSMISSION(USA)LLC.

1250 E 222nd Euclid, OH 44117,
United Staes
TEL: 1-216-618-0138
TEL: 1-216-618-0496
TEL: 1-216-618-3099

博能传动（印度）有限公司

Plot No. E-10/3, MIDC sinnar
(Malegaon) Industrial Area, Nashik,
422123, Maharashtra, India.
TEL:+91-11- 4507 6293（DELHI）
TEL:+91-22-2781 3385（MUMBAI）

BONENG TRANSMISSION(INDIA)PVT.LTD

Plot No. E-10/3, MIDC sinnar
(Malegaon) Industrial Area, Nashik,
422123, Maharashtra, India.
TEL:+91-11- 4507 6293（DELHI）
TEL:+91-22-2781 3385（MUMBAI）

www.boneng.com